ARMY FM 4-20.117 (FM 10-517)
AIR FORCE TO 13C7-1-111

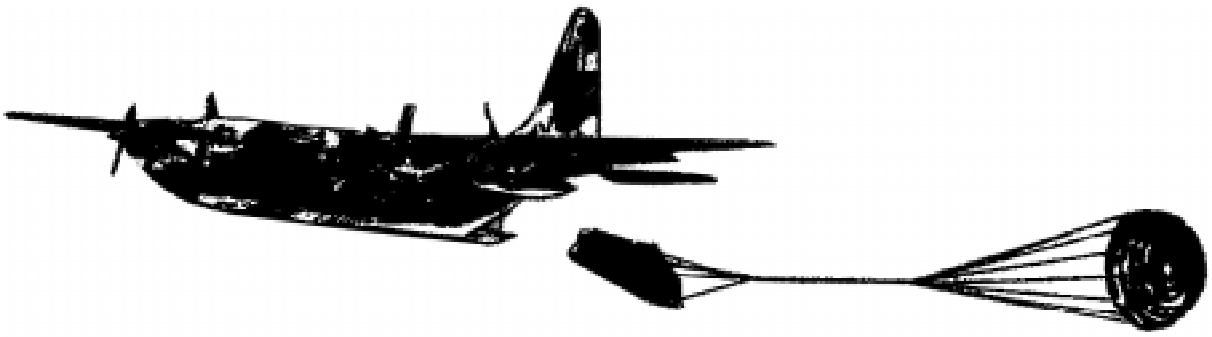

AIRDROP OF SUPPLIES AND EQUIPMENT:

RIGGING HIGH-MOBILITY MULTIPURPOSE WHEELED VEHICLES

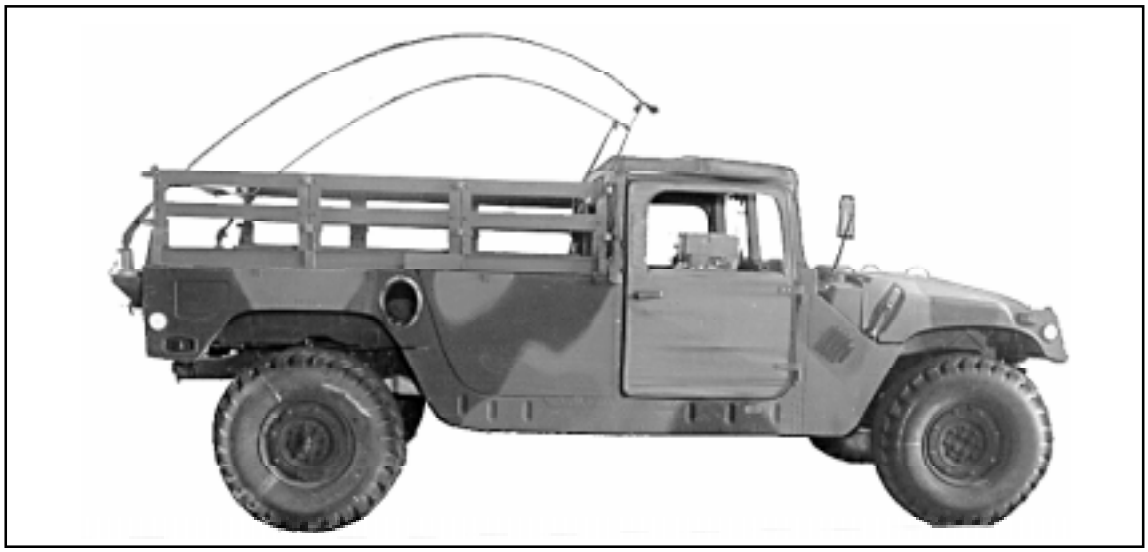

DISTRIBUTION RESTRICTION: Approved for public release; distribution is unlimited.

HEADQUARTERS
DEPARTMENT OF THE ARMY
DEPARTMENT OF THE AIR FORCE

This publication is available on the General Dennis J. Reimer Training and Doctrine Digital Library at www.adtdl.army.mil

FIELD MANUAL
NO 4-20.117

TECHNICAL ORDER
NO 13C7-1-111

HEADQUARTERS
DEPARTMENT OF THE ARMY
DEPARTMENT OF THE AIR FORCE
Washington,DC, 1 October 2001

AIRDROP OF SUPPLIES AND EQUIPMENT: RIGGING HIGH-MOBILITY MULTIPURPOSE WHEELED VEHICLES

Page

TABLE OF CONTENTS

DISTRIBUTION RESTRICTION: Approved for public release; distribution is unlimited

*This publication supercedes FM 10-517/TO 13C7-1-5, 14 November 1989.

Page

Page

Page

CHAPTER 5 RIGGING SPECIFIC ACCOMPANYING LOADS IN HMMWV-SERIES TRUCKS

CHAPTER 6 RIGGING TWO HMMWV TRUCKS ON A 32-FOOT PLATFORM FOR LOW-VELOCITY AIRDROP

Page

PREFACE

SCOPE

This manual tells and shows how to rig HMMWV-series trucks in the Army inventory at the time of publication for low-velocity parachute airdrop. Some specialized truck configurations and loads are included.

USER INFORMATION

The proponent of this publication is HQ TRADOC. You are encouraged to report any errors or omissions and to suggest ways of making this a better manual.

Army personnel, send your comments on DA Form 2028 directly to:

Director
Aerial Delivery and Field Services Department
USA Quartermaster Center and School
1010 Shop Road
Fort Lee, Virginia 23801-1502

Air Force personnel, send your reports on AFTO Form 22 through:

Headquarters
Air Mobility Command (AMC/DOKT)
402 Scott Drive, Unit 3AI
Scott AFB, Illinois 62225-5302

Air Force personnel in Special Operations Command, send your reports on AFTO Form 22 through:

HQ AFSOC/DOXT
100 Bartley Street, Suite 260
Hurlburt Field, FL 32544-5273

to:

Director
Aerial Delivery and Field Services Department
USA Quartermaster Center and School
1010 Shop Road
Fort Lee, Virginia 23801-1502

Also send an information copy of AFTO Form 22 to:

WR-ALC/LKCB
460 Richard Ray Blvd
Warner Robbins AFB, GA 31098-1640

CHAPTER 1

INTRODUCTION

DESCRIPTION OF ITEMS

1-1. The HMMWV-series trucks that can be rigged using the procedures in this manual are listed below.

a. M998 Cargo/Troop Carriers. The M998 truck weighs 5,200 pounds. It is 180 inches long and 85 inches wide. The reduced height of the truck is 54 inches.

The M998A1 truck weighs 5,380 pounds. Its length is 180 inches and its width is 86 inches. The reduced height is 56 inches.

b. M1038 Cargo/Troop Carriers With Winch. The M1038 truck weighs 5,327 pounds. It is 186 inches long and 85 inches wide. The reduced height of the truck is 54 inches.

The M1038A1 truck weighs 5,507 pounds. Its length is 186 inches and its width is 86 inches. The reduced height is 56 inches.

c. M1025 Armament Carriers, Armored. The M1025 truck weighs 5,960 pounds. It is 180 inches long and 85 inches wide. The reduced height of the truck is 74 inches.

The M1025A1 truck weighs 6,140 pounds. Its length is 180 inches and its width is 86 inches. The reduced height is 74 inches.

The M1025A2 truck weighs 6,780 pounds. Its length is 191 inches and its width is 86 inches. The reduced height is 74 inches.

d. M1025A2 Armament Carrier (Modified), With Winch. This is NOT the same carrier as the M1025A2. External and internal modifications have been made to support special operations. The M1025A2 (modified) carrier weighs 7,020 pounds. It is 191 inches long and 86 inches wide.

e. M1026 Armament Carriers, Armored With Winch. The M1026 truck weighs 6,087 pounds. It is 186 inches long and 85 inches wide. The reduced height of the truck is 74 inches.

The M1026A1 truck weighs 6,267 pounds. Its length is 186 inches and its width is 86 inches. The reduced height is 74 inches.

f. M1026 Armament Carrier (Modified). This is NOT the same carrier as the M1026. External and internal modifications have been made to support special operations.The M1026 (modified) carrier weighs 6,087 pounds. It is 185 inches long and 85 inches wide. The reduced height of the truck is 69 inches.

g. M966 TOW Carriers, Armored . The M966 truck weighs 6,051 pounds. It is 180 inches long and 85 inches wide. The reduced height of the truck is 74 inches.

The M966A1 truck weighs 6,231 pounds. Its length is 180 inches and its width is 86 inches. The reduced height is 74 inches.

h. M1036 TOW Carrier, Armored With Winch. The M1036 truck weighs 6,178 pounds. It is 186 inches long and 85 inches wide. The reduced height of the truck is 74 inches.

i. M1121 TOW Carrier, Armored. The M1121 truck weighs 7,900 pounds. It is 180 inches long and 85 inches wide. The reduced height of the truck is 74 inches.

j. M1043 Armament Carriers, With Supplemental Armor. The M1043 truck weighs 6,411 pounds. It is 180 inches long and 85 inches wide. The reduced height of the truck is 74 inches.

The M1043A1 truck weighs 6,591 pounds. Its length is 180 inches and its width is 86 inches. The reduced height is 74 inches.

The M1043A2 truck weighs 7,230 pounds. Its length is 191 inches and its width is 86 inches. The reduced height is 74 inches.

k. M1044 Armament Carriers, With Supplemental Armor and Winch. The M1044 truck weighs 6,411 pounds. It is 186 inches long and 85 inches wide. The reduced height of the truck is 74 inches.

The M1044A1 truck weighs 6,718 pounds. Its length is 186 inches and its width is 86 inches. The reduced height is 74 inches.

l. M1045 Armament Carriers, With Supplemental Armor. The M1045 truck weighs 6,438 pounds. It is 180 inches long and 85 inches wide. The reduced height of the truck is 74 inches.

The M1045A1 truck weighs 6,618 pounds. Its length is 180 inches and its width is 86 inches. The reduced height is 74 inches.

The M1045A2 truck weighs 7,258 pounds. Its length is 191 inches and its width is 86 inches. The reduced height is 74 inches.

m. M1046 TOW Carriers, With Supplemental Armor and Winch. The M1046 truck weighs 6,565 pounds. It is 186 inches long and 85 inches wide. The reduced height of the truck is 74 inches.

The M1046A1 truck weighs 6,745 pounds. Its length is 186 inches and its width is 86 inches. The reduced height is 74 inches.

n. M1037 S250 Shelter Carrier. The M1037 truck weighs 5,425 pounds. It is 191 inches long and 85 inches wide. The reduced height, without the shelter, is 54 inches.

o. M1037 Cargo/Troop Carrier (Modified), With Winch. This is NOT the same carrier as the M1037. External and internal modifications have been made to support artillery operations. The M1037 (modified) is 185 inches long and 85 inches wide. The reduced height of the truck is 70 inches.

p. M1042 S250 Shelter Carrier, With Winch.The M1042 truck weighs 5,551 pounds. It is 197 inches long and 85 inches wide. The reduced height, without the shelter, is 54 inches.

q. M1097 Truck, Utility, Heavy Variant. The M1097 truck weighs 5,600 pounds. It is 191 inches long and 86 inches wide. The reduced height of the truck is 56 inches.

The M1097A1 truck weighs 5,600 pounds. Its length is 191inches and its width is 86 inches. The reduced height is 56 inches.

The M1097A2 truck weighs 5,900 pounds. Its length is 191 inches and its width is 86 inches. The reduced height is 56 inches. This truck may have a winch.

r. M1113 Truck, Utility, Expanded Capacity. The M1113 truck weighs 6,190 pounds. It is 197 inches long and 86 inches wide. The reduced height of the truck is 56 inches. This truck may have a winch.

s. M1114 Armament Carrier, Expanded Capacity, Up-Armored, With Winch. The M1114 truck weighs 9,800 pounds. It is 197 inches long and 86 inches wide. The reduced height of the truck is 74 inches.

SPECIAL CONSIDERATIONS

1-2. Special considerations for this manual are listed below.

a. The loads covered in this manual may include hazardous materials as defined in AFJMAN 24-204/TM 38-250. If included, the hazardous material must be packaged, marked, and labeled as required by AFJMAN 24-204/TM 38-250.

b. A copy of this manual must be available to the joint airdrop inspectors during the before- and after-loading inspections.

CAUTION
Only ammunition listed in FM 10-500-53/MCRP 4-3.81/TO 13C7-18-41 may be airdropped.

CHAPTER 2

RIGGING 1 1/4-TON HMMWV SOFT-TOP TRUCKS FOR LOW-VELOCITY AIRDROP

DESCRIPTION OF LOAD

2-1. The unrigged M998 cargo/troop carrier (Figure 2-1) is described in Chapter 1. The HMMWV truck is rigged on a 16-foot type V platform for low-velocity airdrop. An accompanying load weighing a minimum of 800 pounds and a maximum of 2,000 pounds (2,500 pounds for the M1037 modified HMMWV, M1042, M1097, M1097A1, and M1097A2) must be rigged in the truck. The load requires two G-11 cargo parachutes. The following trucks can be rigged using the procedures given in this chapter:
M998A1
M1038 and M1038A1
M1037 and M1037 modified
M1042
M1097, M1097A1, and M1097A2

PREPARING PLATFORM

2-2. Prepare a 16-foot, type V airdrop platform according to TM 10-1670-268-20&P/TO 13C7-52-22. Install four tandem links as shown in Figure 2-2. Attach and number 18 clevis assemblies as shown in Figure 2-2.

NOTES: 1. The nose bumper may or may not be installed.
2. Measurements given in this chapter are from the front edge of the platform, NOT from the front edge of the nose bumper.

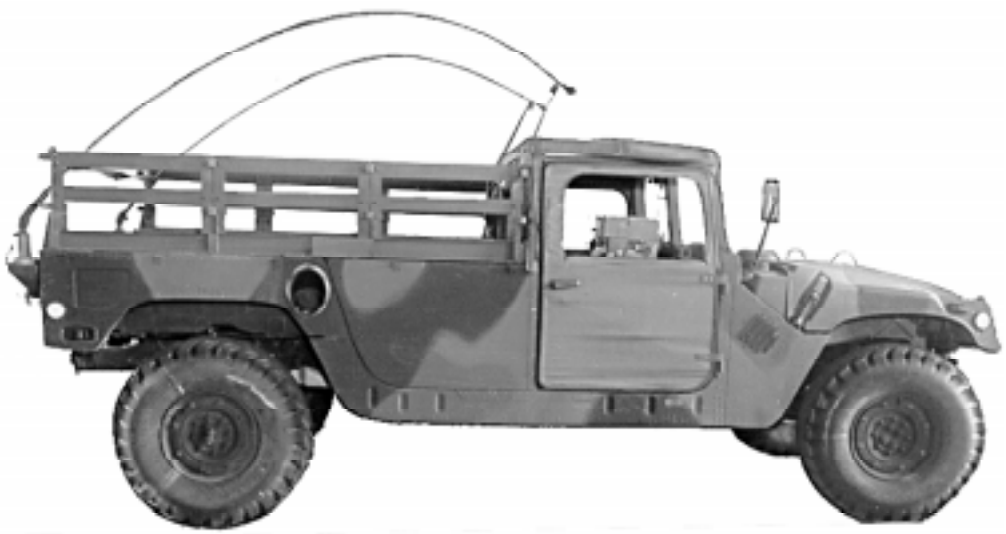

TWO-DOOR CONFIGURATION

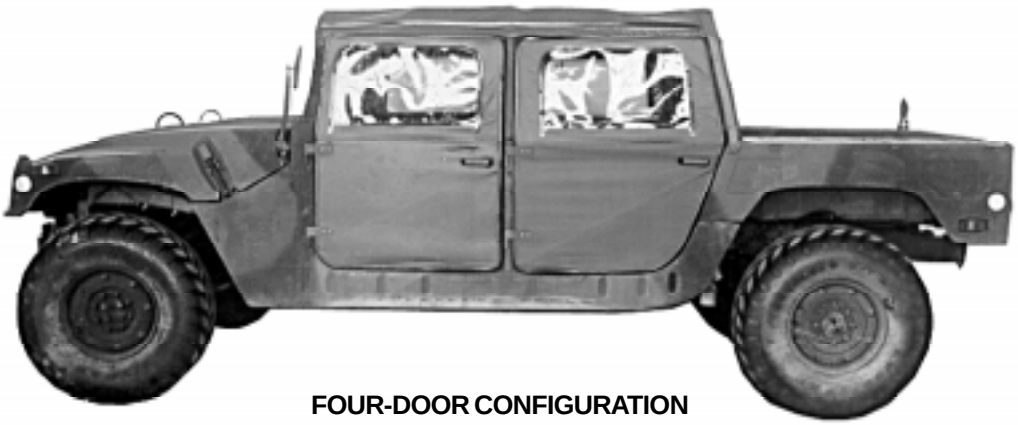

FOUR-DOOR CONFIGURATION

Figure 2-1. M998 Cargo/Troop Carrier

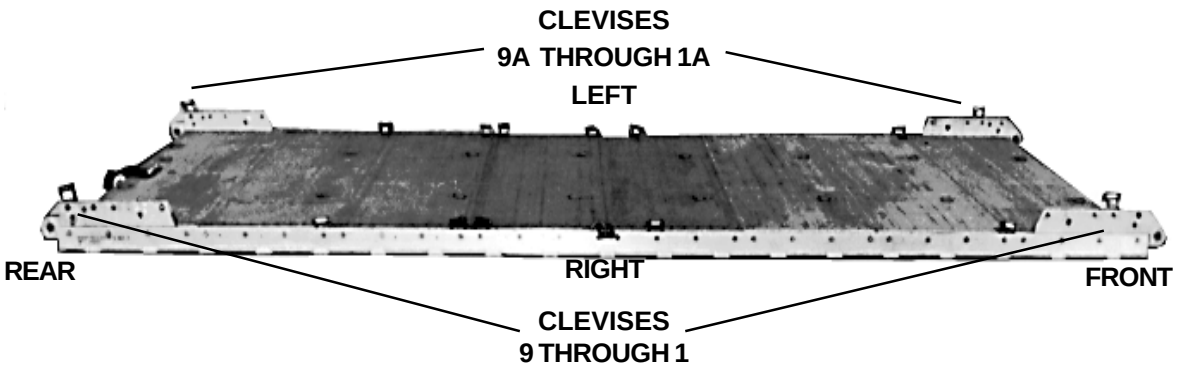

Step:

1. Install a tandem link on the front of each platform side rail using holes 1, 2, and 3.
2. Install a tandem link on the rear of each platform side rail using holes 30, 31, and 32.
3. Install a clevis on bushing 2 of each front tandem link.
4. Install a clevis on bushing 4 of each rear tandem link.
5. Starting at the front of the platform, install clevises on each platform side rail using the bushings bolted on holes 5, 15, 20, 21 and 25.
6. Install a clevis on bushing 17 in an inverted position. Install a clevis on bushing 17A in the normal position. Bolt an additional clevis to each of the clevises on the 17th bushings.
7. Starting at the front of the platform, number the clevises bolted to the right side of the platform from 1 through 9, and those bolted to the left side from 1A through 9A. Number the clevises bolted to the 17th bushings 5 and 5A. Number the clevises bolted to these clevises 4 and 4A.
8. Label the tie-down rings according to FM 4-20.102/TO 13C7-1-5.

Figure 2-2. Platform Prepared

PREPARING AND POSITIONING HONEYCOMB STACKS

2.3. Prepare three honeycomb stacks as shown in Figures 2-3 and 2-4. Position the stacks on the platform as shown in Figure 2-5.

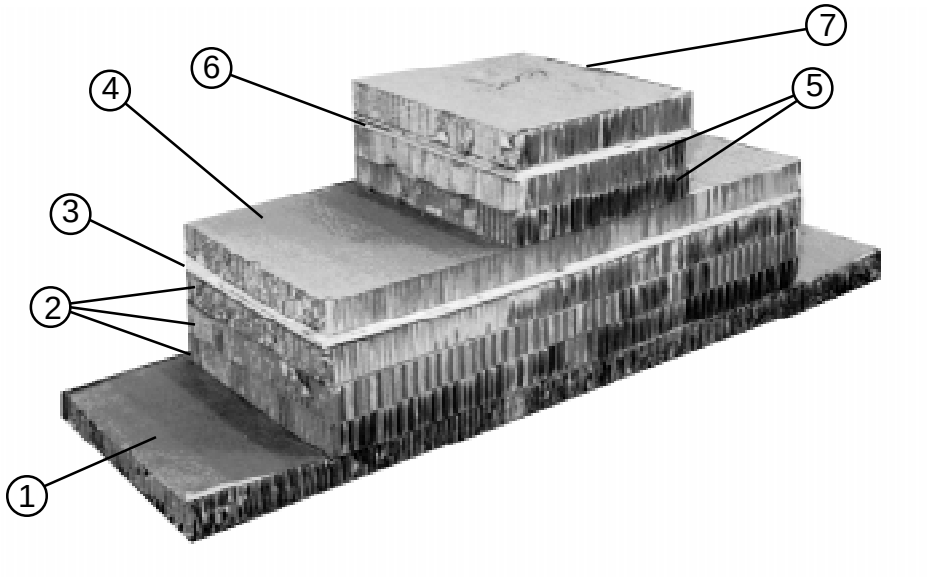

1. Use an 80- by 24-inch piece of honeycomb to form a base.
2. Center and glue three 54- by 24-inch pieces of honeycomb on the base.
3. Place a 3/4- by 54- by 24-inch piece of plywood over the honeycomb placed in step 2 above.
4. Place one 54- by 24-inch piece of honeycomb on top of the plywood placed in step 3 above.
5. Center two 20- by 24-inch pieces of honeycomb on top of the honeycomb placed in step 4 above.
6. Place a 3/4- by 20- by 24-inch piece of plywood over the honeycomb placed in step 5 above.
7. Place one 20- by 24-inch piece of honeycomb on top of the plywood placed in step 6 above.

Figure 2-3. Stacks 1 and 3 Prepared

Notes: 1. This drawing is not drawn to scale.
2. All dimensions are given in inches.

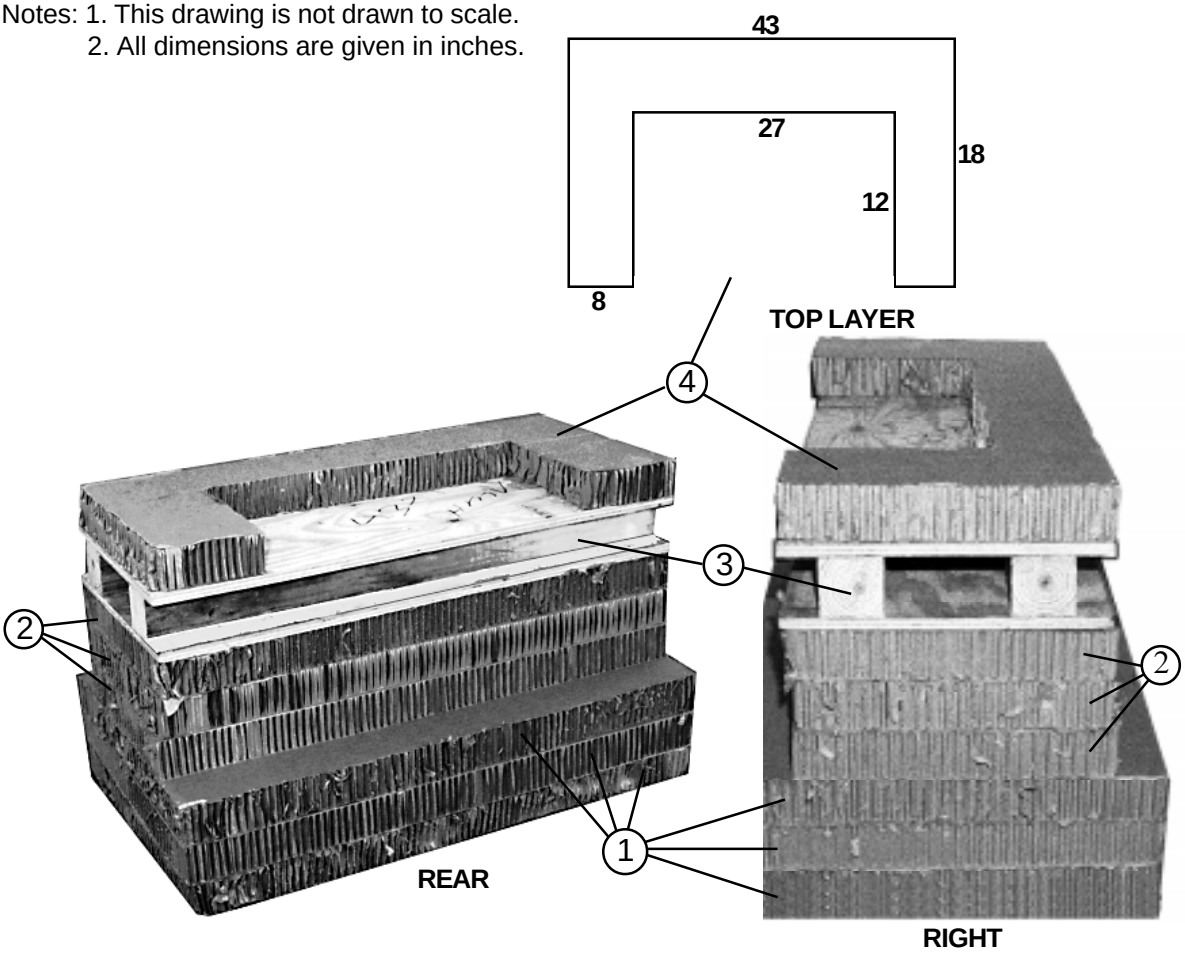

1. Glue three 43- by 26-inch pieces of honeycomb flush together to form a base.

2. Center and glue three 43- by 18-inch pieces of honeycomb flush on the base.

3. Nail a 43-inch piece of 4- by 4-inch lumber parallel to each long side and 1 1/2 inches from each long edge of a 3/4- by 43- by 18 inch piece of plywood. Nail a second 3/4- by 43- by 18-inch piece of plywood to the lumber and flush with the bottom piece of plywood. Glue the wooden section of the stack flush on the honeycomb placed in step 2 above.

4. Make the cutout as shown in a 43- by 18-inch piece of honeycomb. Glue the honeycomb flush over the plywood.

Figure 2-4. Stack 2 Prepared

Notes: 1. This drawing is not drawn to scale.
2. Dimensions are given in inches.

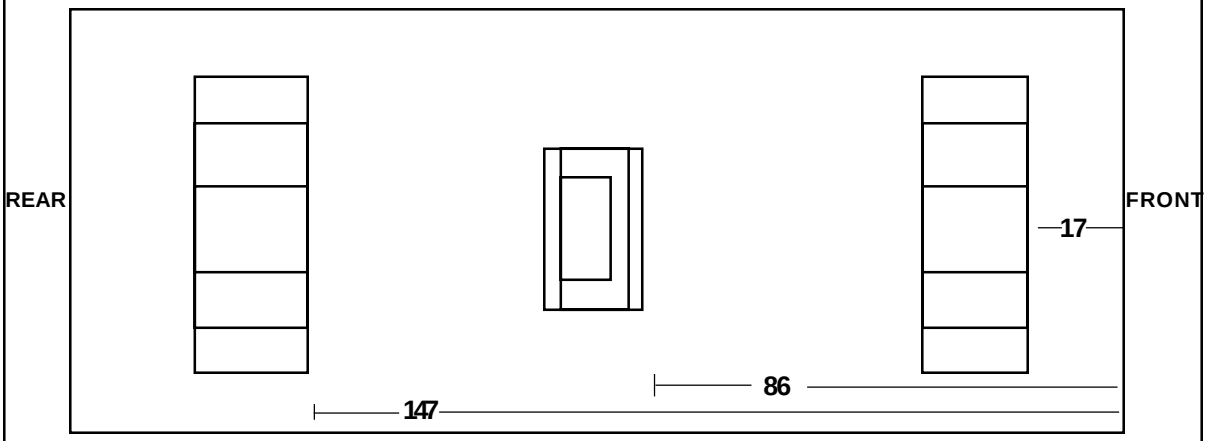

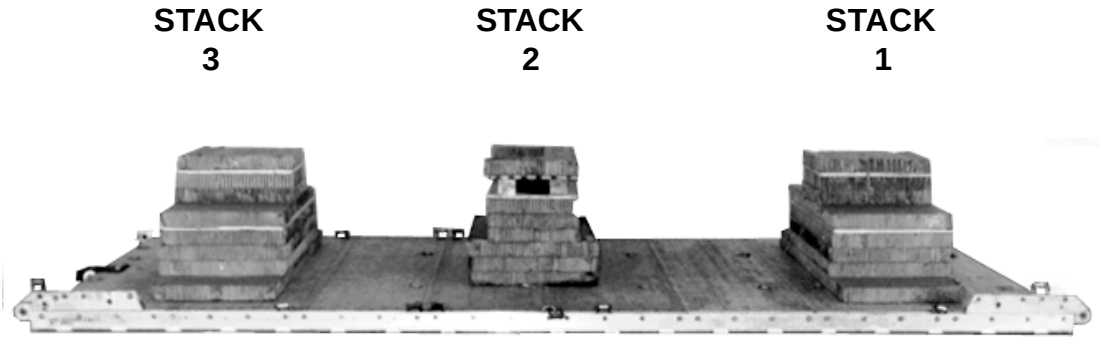

Stack Number	Position of Stack on Platform
	Place stack:
1	17 inches from the front edge of the platform and centered.
2	86 inches from the front edge of the paltform and centered. Face the cutout to the rear.
3	147 inches from the front edge of the platform and centered.

Figure 2-5. Honeycomb Stacks Positioned on Platform

PREPARING TRUCK

2-4. Prepare the truck as described below.

a. Make sure the fuel tank is no more than 3/4 full. Prepare the fuel tank filler cap and fuel filler opening as shown in Figure 2-6. Prepare the fuel tank drain plug as shown in Figure 2-7.

Note: Certain units may be authorized a waiver allowing 95% fuel. One way to verify the tank is 95% full is to fill the tank and withdraw 1 1/4 gallons with a hand pump.

CAUTION
A full tank does not allow for fuel expansion, and is a danger to aircraft and crew.

b. Make sure the batteries and battery compartment comply with AFJMAN 24-204/TM 38-250.

c. Stow the truck OVE according to TM 9-2320-280-10/TO 36A12-1A-2091-1/ TM 2320-10/6.

d. Prepare the cab of the truck as shown in Figure 2-8.

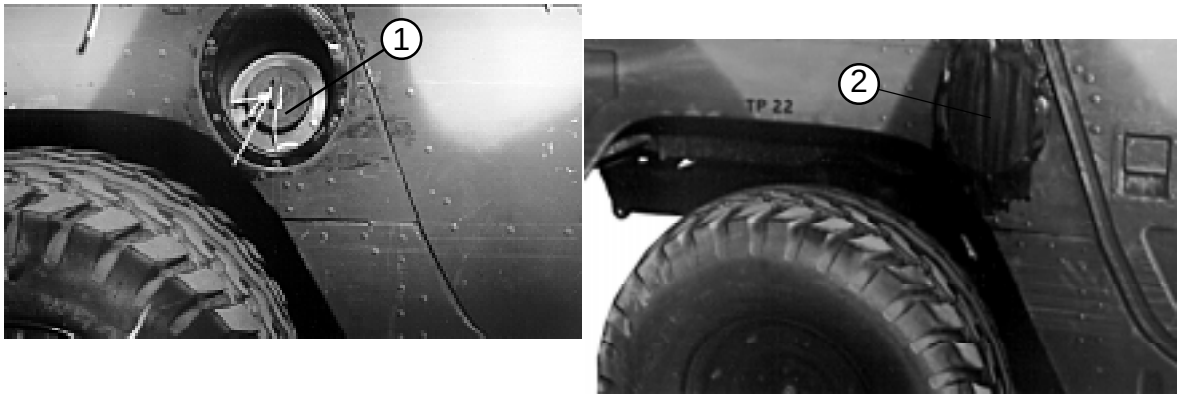

(1) Tie the fuel filler cap to the body of the truck with type III nylon cord.

(2) Tape the fuel filler opening.

Figure 2-6. Fuel Tank Filler Cap and Opening Prepared

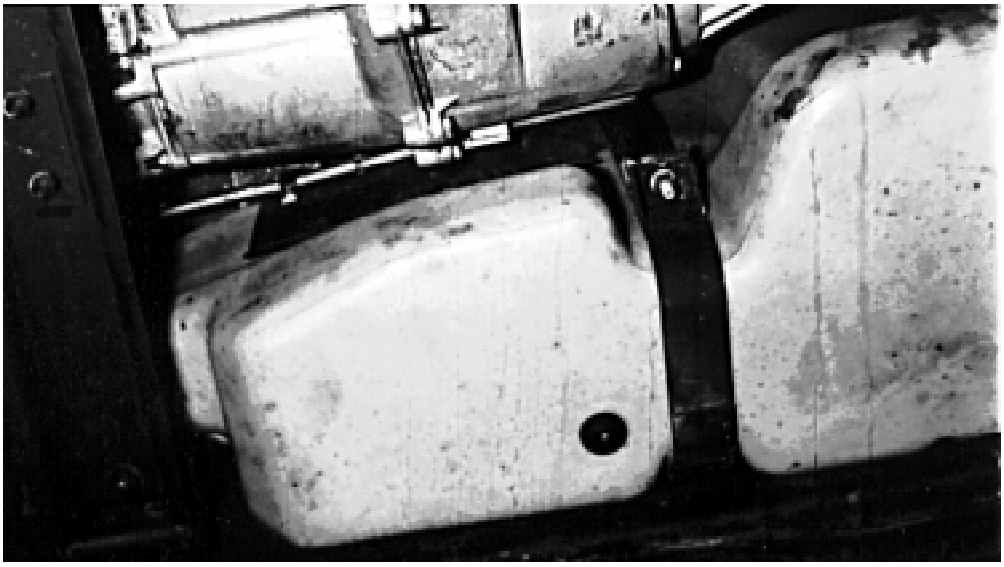

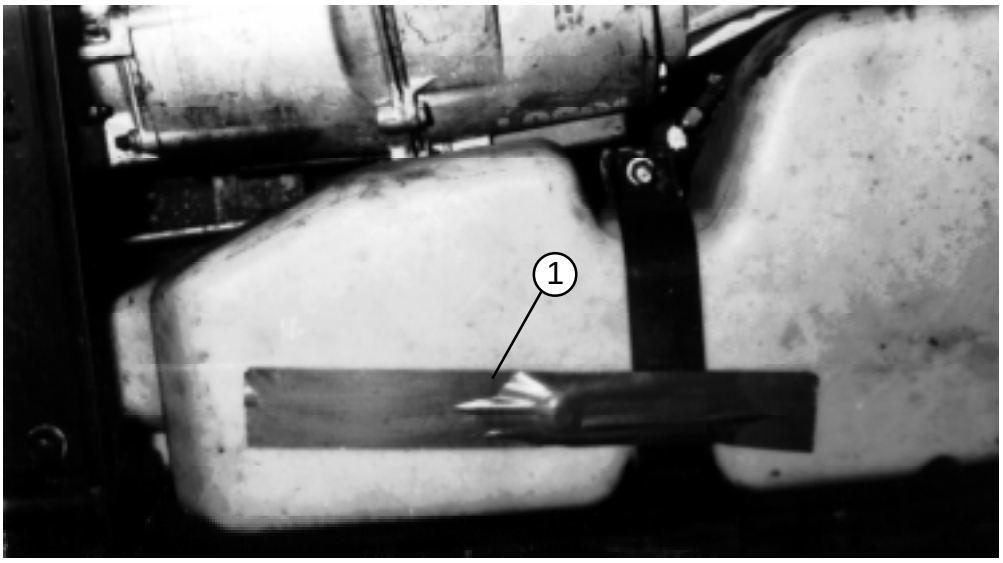

(1) Place a 12-inch length of cloth-backed tape over the fuel tank drain plug.

Figure 2-7. Fuel Tank Drain Plug Prepared

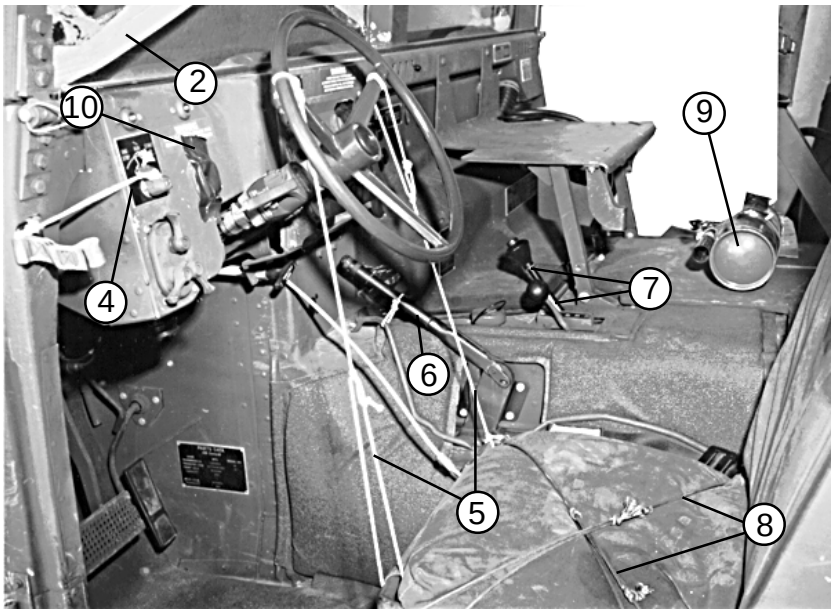

1. Remove all doors, covers, and supporting bows.
2. Tape the windshield glass on both sides in an X.
3. Remove and pad the mirrors. Secure them under the driver's seat with type III nylon cord.
4. Tie the engine start switch in the engine stop position with type I, 1/4-inch cotton webbing.
5. Tie the steering wheel to the seat frame in two places with type III nylon cord, or use the retractable steering wheel locking cable. If the locking cable is used, secure it to the steering wheel with type III nylon cord, not a padlock.
6. Tie the emergency brake handle in the off position with type III nylon cord.
7. Place the transmission and four-wheel drive levers in the neutral position.
8. Tie the seat cushions to the seat frames with type III nylon cord. Fold the passenger seats in four-door trucks and secure them with the pins provided.
9. Tie the fire extinguisher in place with two lengths of type III nylon cord.
10. Tape all instrument panel gauges.

Figure 2-8. Cab Prepared

e. Secure and pad radio equipment in the cab section as shown in Figure 2-9.

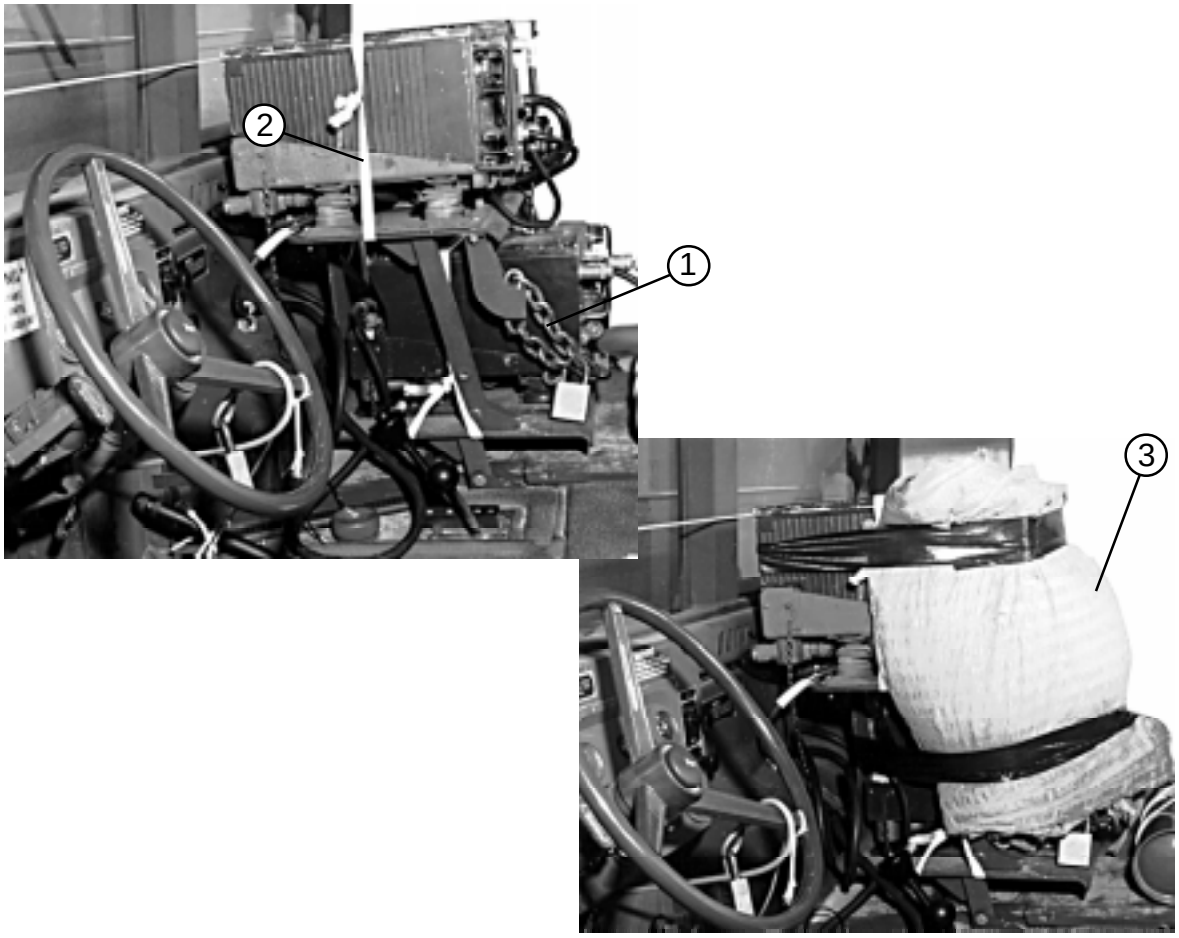

1. Secure communications equipment in its mount with chains and padlocks.
2. Tie the equipment to its mount with 1-inch tubular nylon webbing.
3. Pad the front of the equipment generously with cellulose wadding taped in place. Pad the radio handset with cellulose wadding and tie the handset to the mount with type III nylon cord.
4. Remove antennas and pad the antenna mounts with cellulose wadding taped in place (not shown).

Figure 2-9. Communications Equipment Secured and Padded

f. Prepare the front of soft-top trucks with foldable windshields as shown in Figure 2-10.

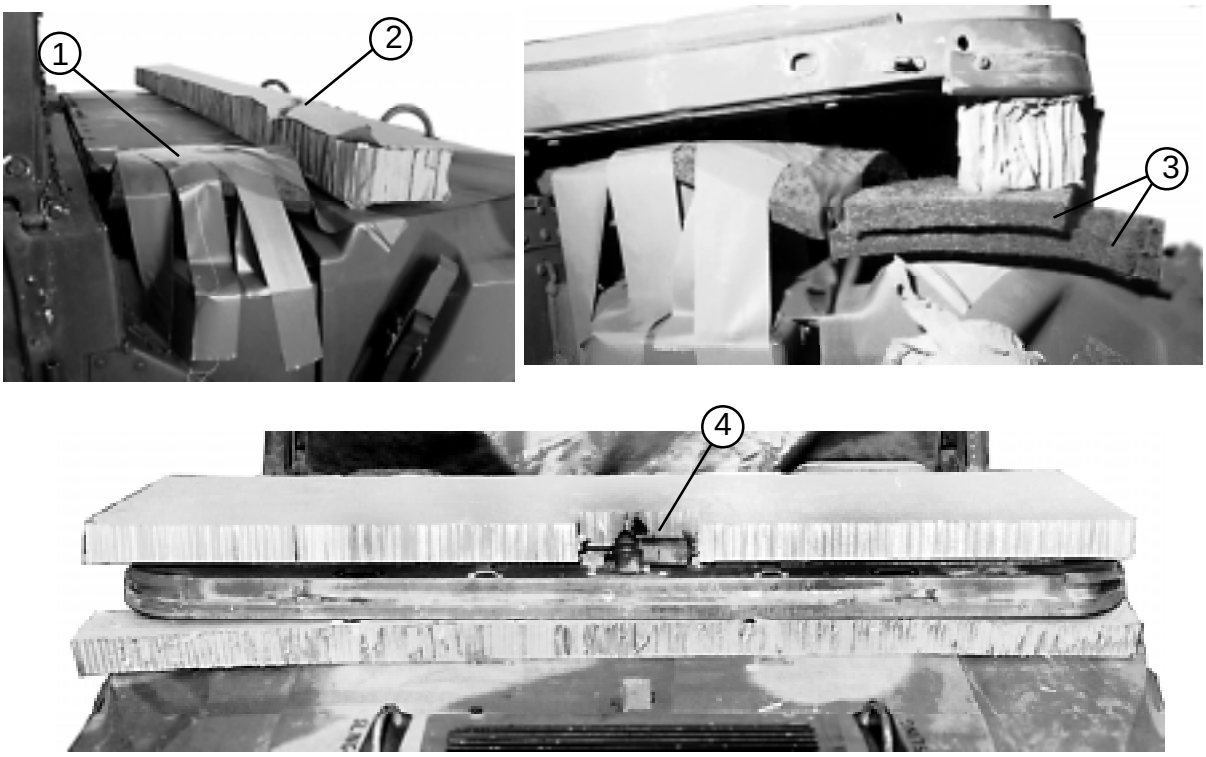

1. Cover the breather cap with one layer of felt taped in place.
2. Fold the windshield down over a 78- by 4-inch piece of honeycomb with the top edge of the windshield aligned with the front edge of the honeycomb. Note where the bumper pads and wipers make contact. Make indentations in the honeycomb to allow for them.
3. Pad under the honeycomb placed in step 2 above with two pieces of felt placed on either side of the center bulge in the hood.
4. Fold the windshield down over the honeycomb and felt placed in steps 2 and 3 above. Replace the securing pins in the brackets. Cover the rear side of the folded windshield with a 78- by 19-inch piece of honeycomb. Make a cutout to allow for the wiper motor.

Figure 2-10. Front of Truck Prepared

Notes: 1. This drawing is not drawn to scale.
2. All dimensions are given in inches.

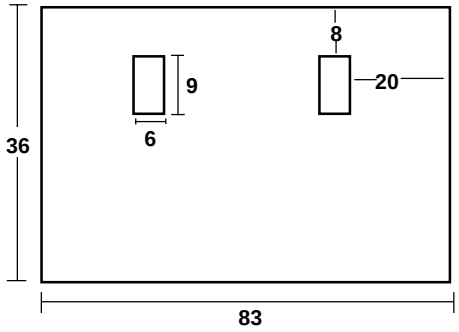

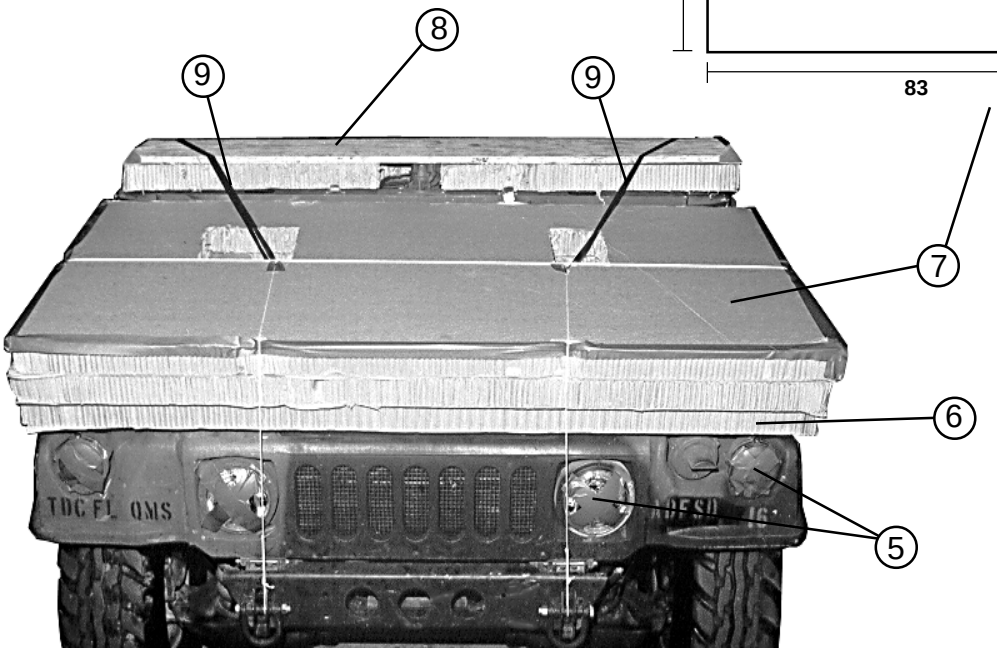

(5) Tape all lights and reflectors. Tape the hood latches.

(6) Center a 78- by 4-inch piece of honeycomb along the front edge of the hood.

(7) Place two 83- by 36-inch pieces of honeycomb, with cutouts as shown, on the hood. Tie one length of type III nylon cord over the honeycomb to the front coil springs on each side. Tie two lengths of type III nylon cord from the airlift bracket to the front tie-down bracket on each side. Tape the honeycomb where the cord passes over the edges.

(8) Place a 3/4- by 78- by 19-inch piece of plywood over the honeycomb placed in step 4. Round the front corners, and drill a 1/2-inch hole 6 inches from the bottom and 1 inch from each end.

(9) Secure the plywood with two lengths of 1/2-inch tubular nylon webbing tied from the airlift bracket to the windshield securing pin on each side.

Figure 2-10. Front of Truck Prepared (continued)

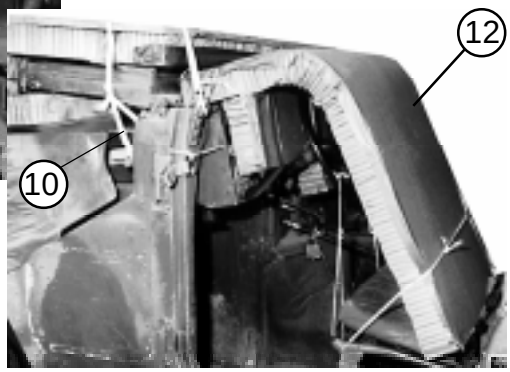

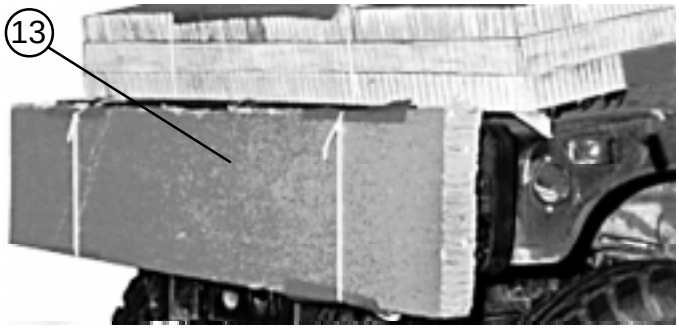

(10) Secure the plywood to the windshield with 1/2-inch tubular nylon webbing tied through the drilled holes in the plywood and to the mirror brackets (shown), or to the door hinges.

(11) Cover the instrument panel with a 23- by 11-inch piece of honeycomb. Make a cutout to allow for the turn signal lever. Tape the honeycomb in place.

(12) Cover the steering wheel with a 24- by 44-inch piece of honeycomb. Tape the edges and tie the honeycomb to the seat frame with type III nylon cord. Tie the honeycomb at the top to the windshield securing bracket and to the defroster control knob with type III nylon cord.

(13) On trucks equipped with the brush guard, cover the front side with an 83- by 14-inch piece of honeycomb, tied in place with type III nylon cord.

Figure 2-10. Front of Truck Prepared (continued)

g. Prepare and secure the pioneer tool kit according to TM 9-2320-280-10/ TO 36A12-1A-2091-1/TM 2320-10/6, and as shown in Figure 2-11.

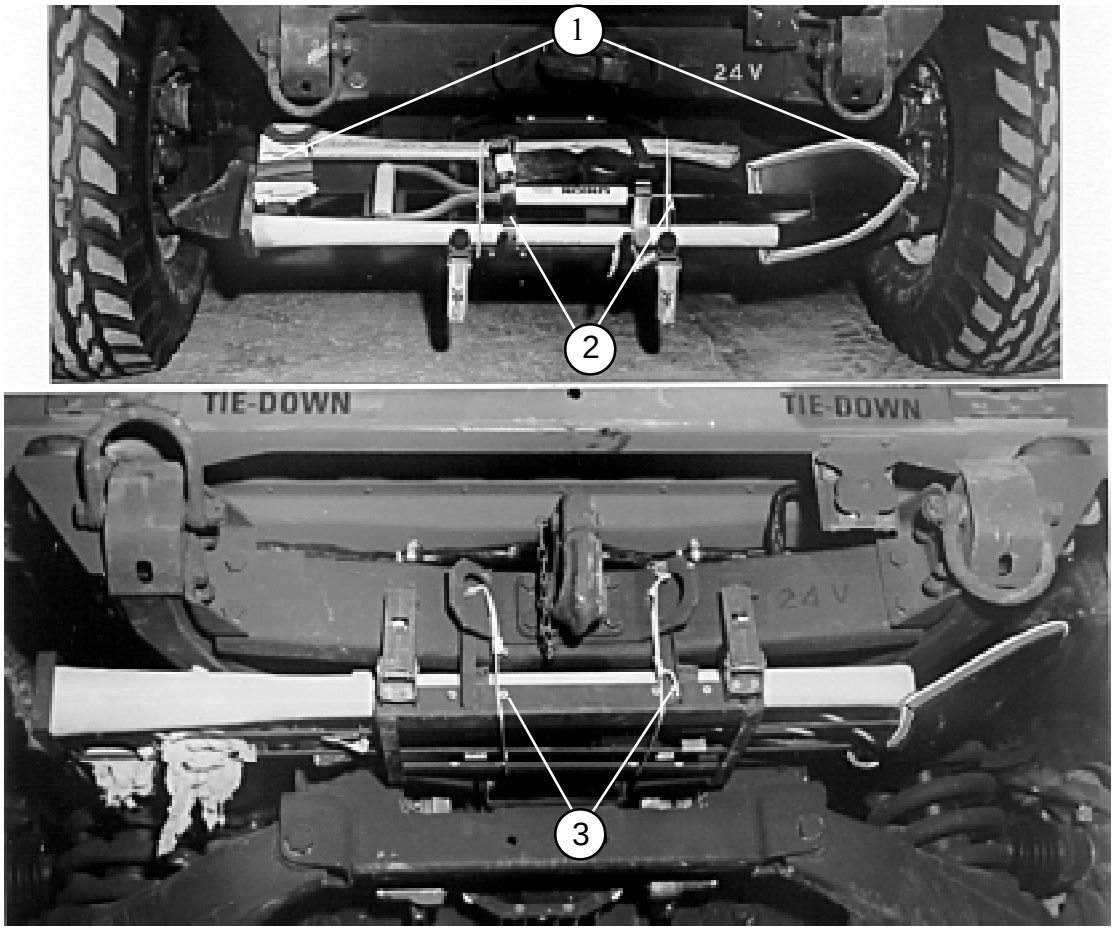

(1) Tape all sharp edges of the pioneer tools. Pad the ax head with cellulose wadding.

(2) Place the tools in the rack, and secure them with the straps provided, and with type III nylon cord. For the M1037 (modified) truck, secure the tools with 1/2-inch tubular nylon webbing.

(3) Close and latch the tool rack. Tie the rack in place with type III nylon cord.

Figure 2-11. Pioneer Tool Kit Secured

h. Prepare the underside of the truck as shown in Figure 2-12.

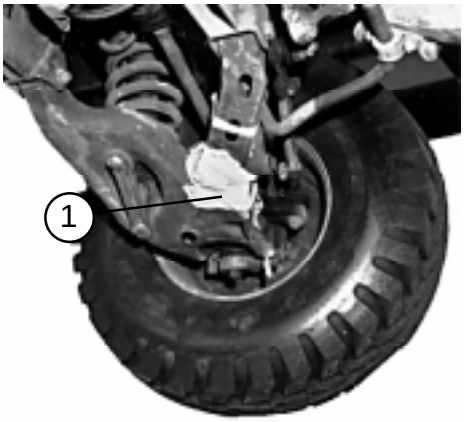

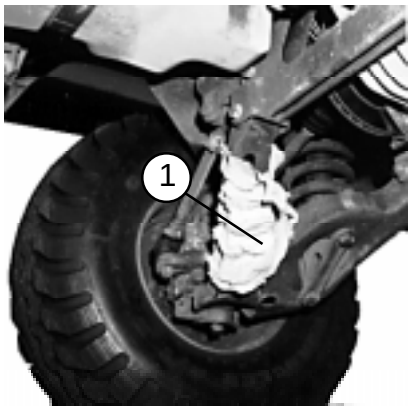

(1) Pad the lower control arms on the front and rear of the truck with cellulose wadding taped in place.

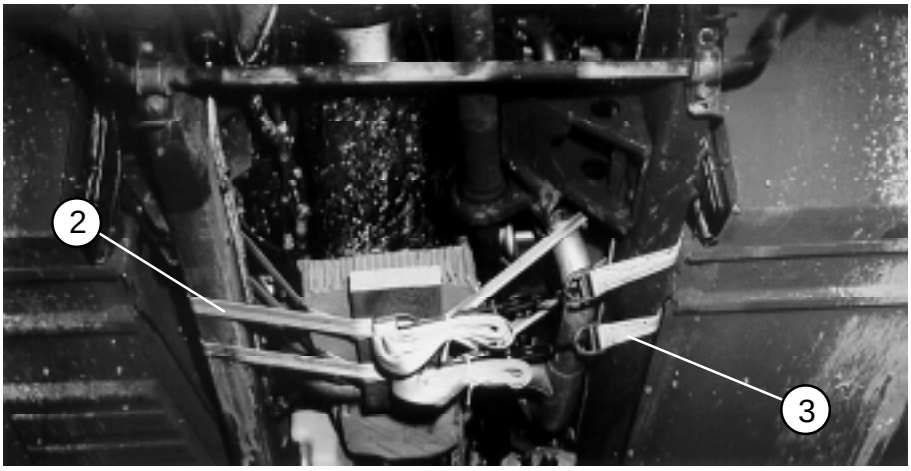

(2) Pass a 15-foot lashing over the right frame rail, under the oil pan, and over the left frame rail. Make sure the lashing goes over the exhaust pipe and then under it. Make sure the wires running along the frame rail are to the outside of the lashing. Place a 12- by 12-inch piece of honeycomb and a 2- by 6- by 16-inch piece of lumber between the lashing and the oil pan. Fasten the lashing with a D-ring and a load binder.

(3) Install another lashing just to the rear of the lashing installed in step 2 above. Route the lashing in the same way.

Figure 2-12. Underside of Truck Prepared

i. Prepare the truck body as shown in Figure 2-13.

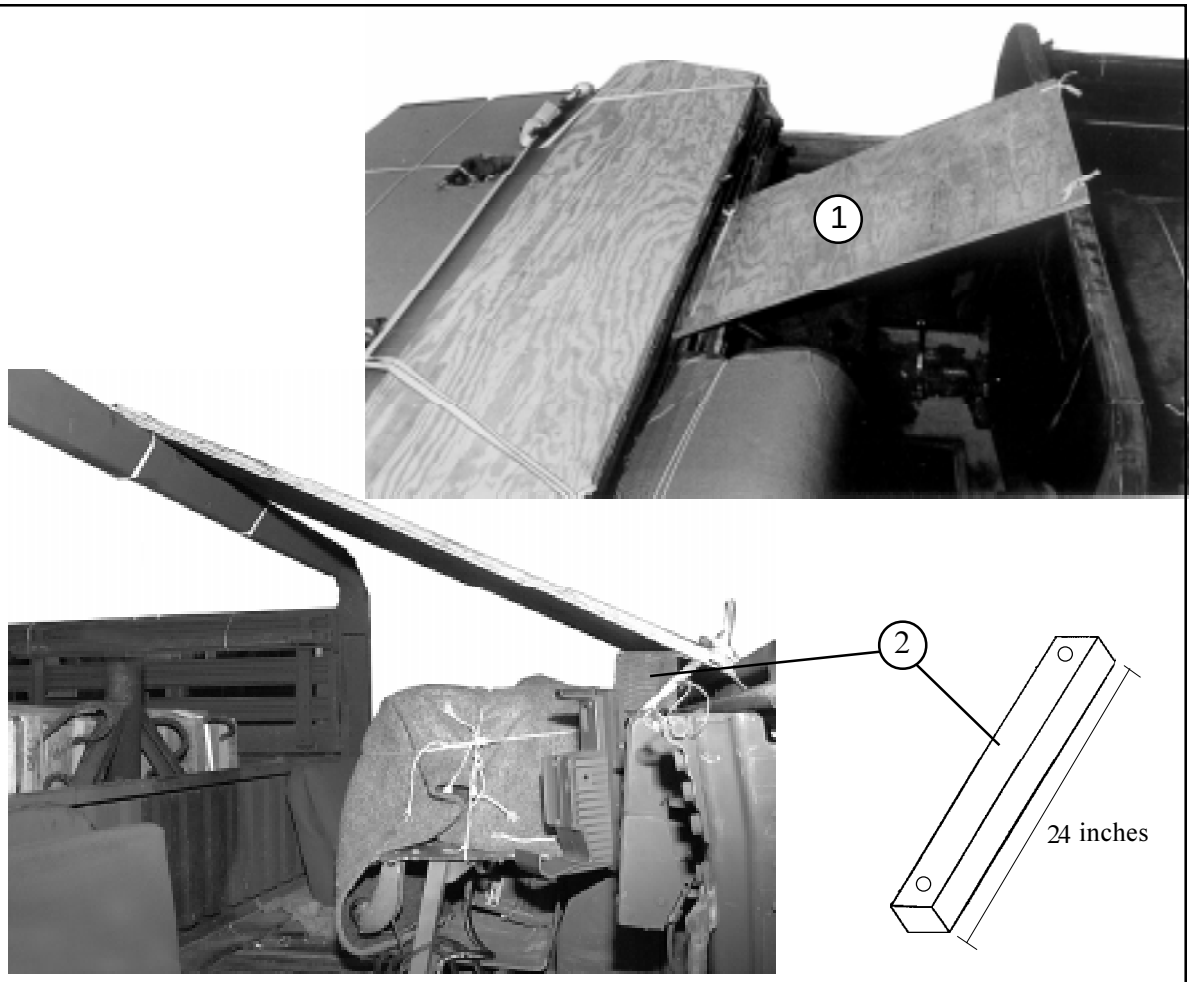

(1) Drill 1/2-inch holes 2 inches in from each corner of a 3/4- by 24- by 42-inch piece of plywood. Center the plywood over the cab with one 24-inch edge resting on the bottom ledge of the windshield frame and the other end on the B-pillar. Secure the plywood to the B-pillar and to convenient points in the cab with 1/2-inch tubular nylon webbing. This plywood will be used as a platform for the release.

(2) For trucks with radios that extend higher than the top of the instrument panel, drill 1/2-inch holes 2 inches from each end of a 24-inch piece of 4- by 4-inch lumber. Place this lumber between the plywood and the top of the instrument panel, the holes facing vertically. Tie the lumber to the radio mounts and the plywood with 1/2-inch tubular nylon webbing.

Figure 2-13. Truck Body Prepared

Notes: 1. This drawing is not drawn to scale.
2. All dimensions are given in inches.

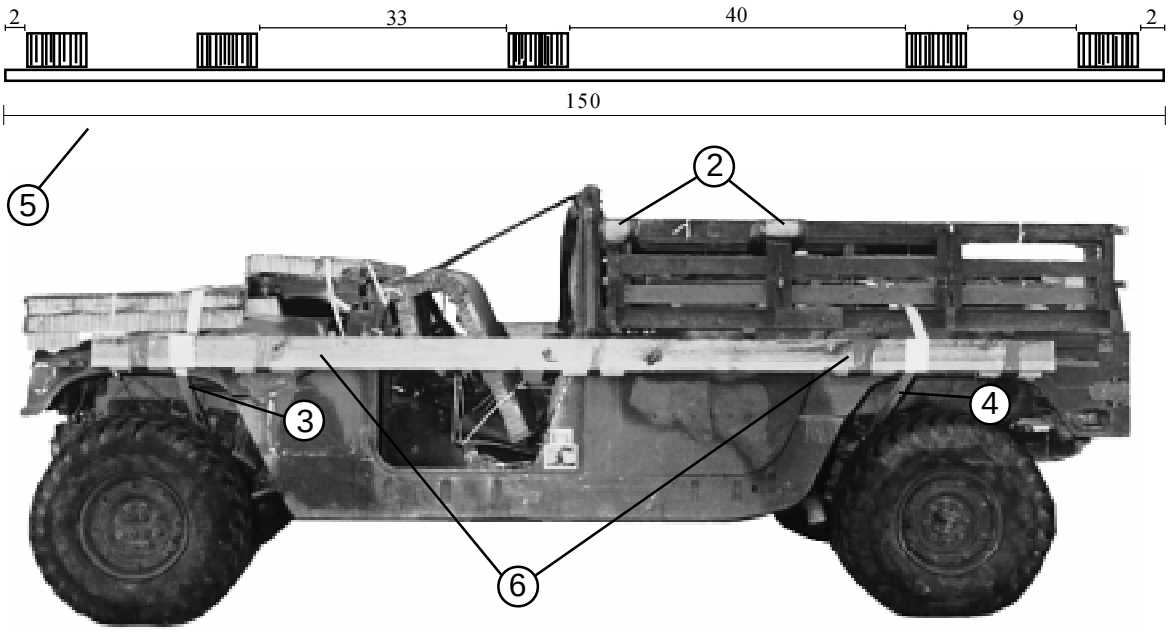

(2) If the wood cargo body sides are installed, pad all sharp edges with cellulose wadding taped in place.

(3) Pass a 15-foot lashing around the upper control arm behind a front wheel and through its own D-ring. Repeat for the other side of the truck.

(4) Pass a 15-foot lashing around the upper control arm behind a rear wheel and through its own D-ring. Repeat for the other side of the truck.

(5) Tape five 6- by 10-inch pieces of honeycomb to a 2- by 6- by 150-inch piece of lumber spaced as shown. Repeat for the second side board.

(6) Bring the lashings positioned in steps 3 and 4 around the boards two turns. Secure the lashings from the left and right sides of the truck together with D-rings and load binders.

Figure 2-13. Truck Body Prepared (continued)

STOWING ACCOMPANYING LOAD

2-5. Use or adapt the procedures shown in Figure 2-14 to stow ammunition and truck equipment. The accompanying load shown is 16 boxes of ammunition and truck equipment weighing 1,800 pounds.

CAUTION:
Only ammunition listed in FM 10-500-53/MCRP 4-3.81/TO 13C7-18-41 may be airdropped. Package, label, and mark hazardous material according to AFJMAN 24-204/TM 38-250.

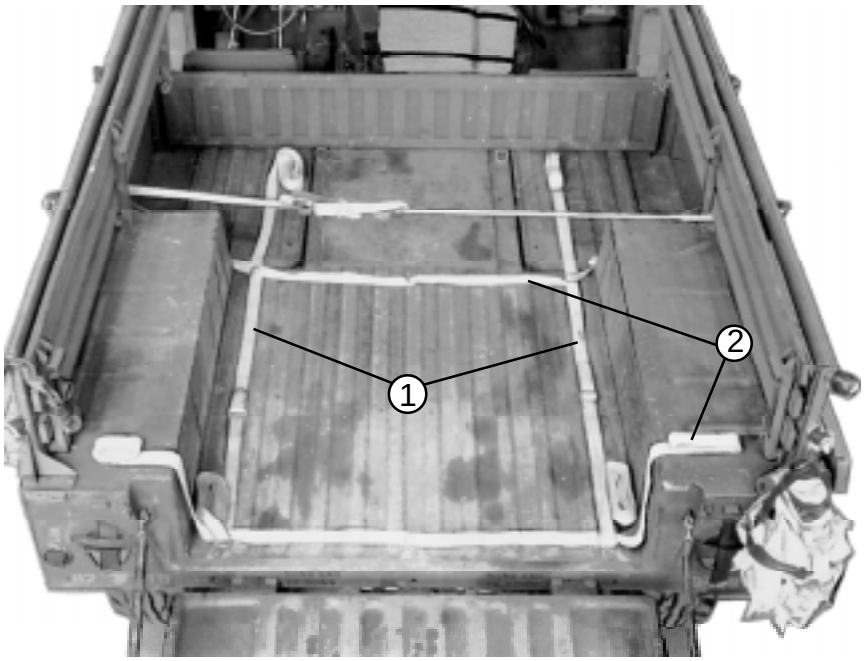

1. Form two 30-foot lashing according to FM 4-20.102/TO 13C7-1-5. Lay the lashings lengthwise across the cargo bed, passing them through the left and right tie-down rings in the cargo floor.
2. Lay two 15-foot lashings widthwise across the cargo bed passing them through the center and rear tie-down rings in the cargo bed floor.

Figure 2-14. Ammunition and Truck Equipment Stowed

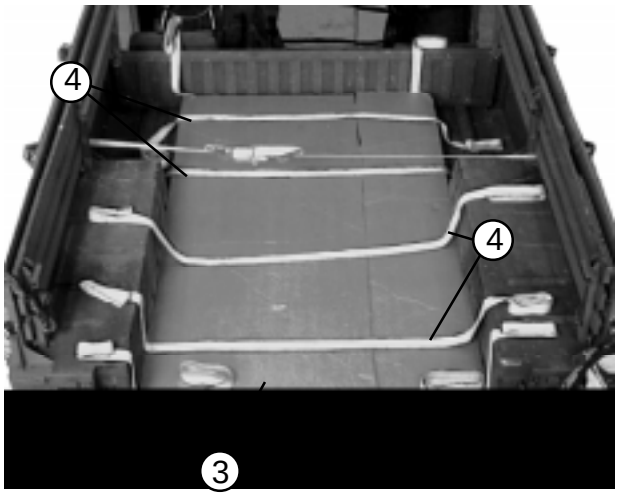

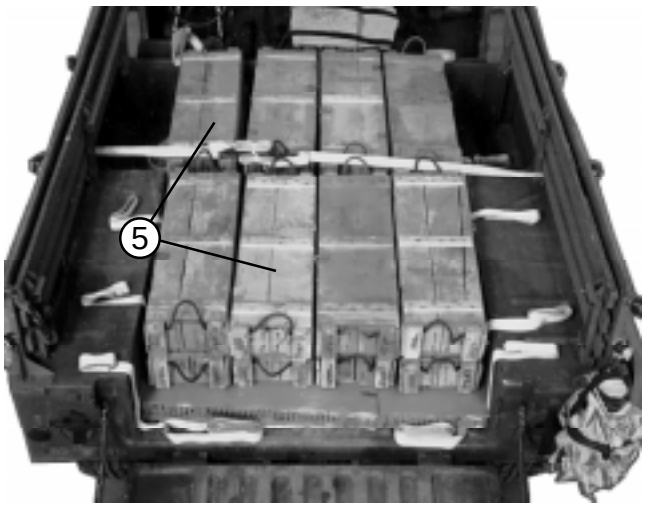

(3) Cover the cargo floor using two pieces of honeycomb to make a 40- by 80-inch layer.

(4) Space four 15-foot lashings evenly across the width of the cargo bed.

(5) Place 16 boxes of ammunition on the honeycomb as shown.

Note: Leave 3 inches of space between any accompanying load and the tailgate to prevent damage to the truck.

Figure 2-14. Ammunition and Truck Equipment Stowed (continued)

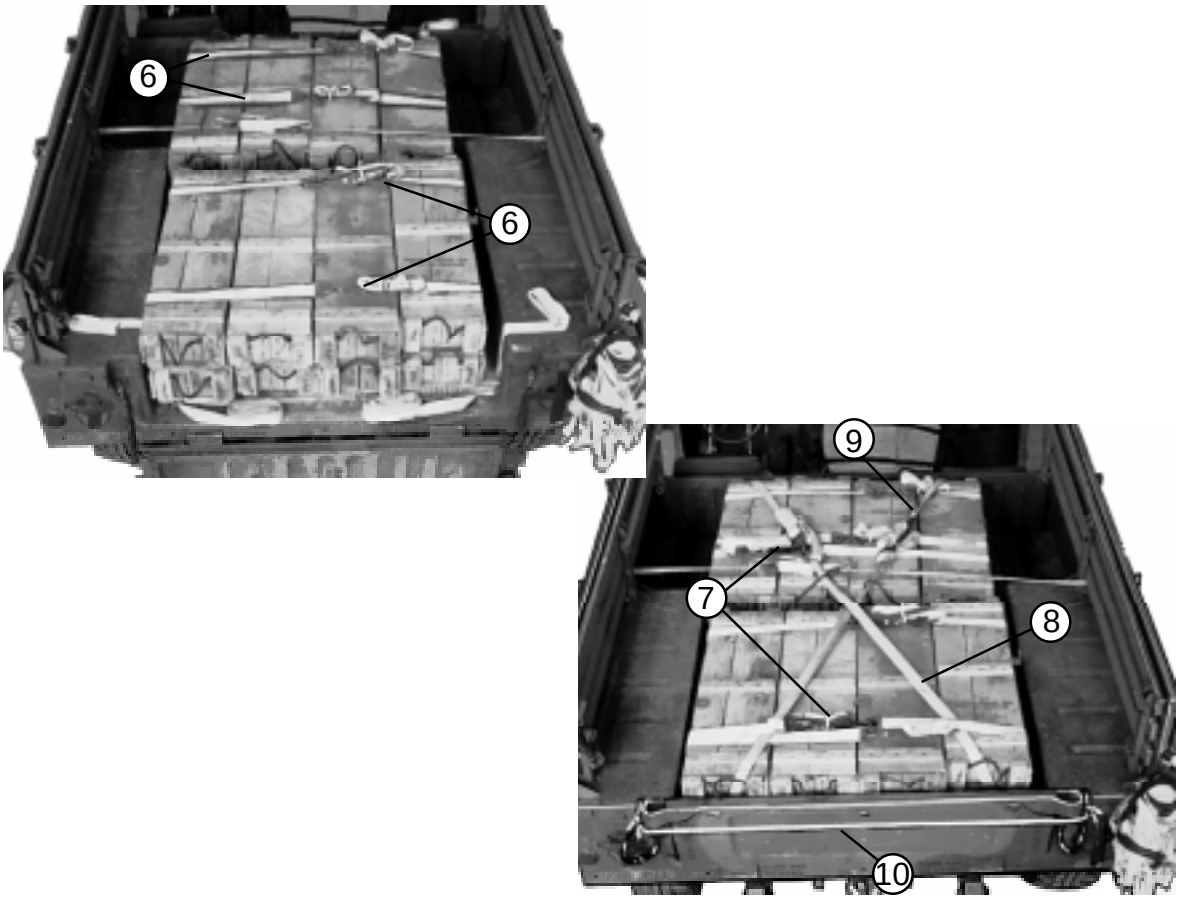

(6) Bind the boxes together with the four side-to-side lashings placed in step 4. Secure each lashing with a D-ring and a load binder.

(7) Secure the lashings placed in step 2 with D-rings and load binders.

(8) Join the left front and right rear 30-foot lashings placed in step 1 with two D-rings and a load binder. Pass the lashings through the box handles wherever possible.

(9) Join the left rear and right front 30-foot lashings placed in step 1 in the same way as step 8 above.

(10) Close the tailgate. Secure it to the chain hook brackets with a single length of 1/2-inch tubular nylon webbing.

Figure 2-14. Ammunition and Truck Equipment Stowed (continued)

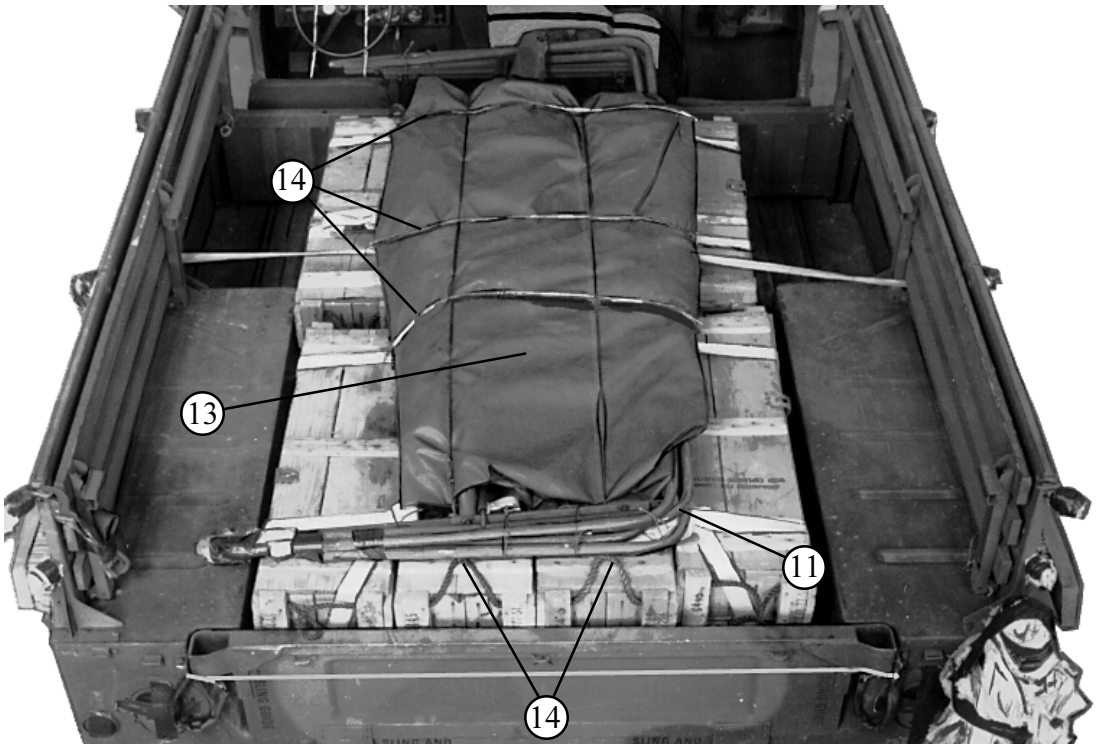

(11) Tie the truck tarpaulin bows together with type III nylon cord. Place them on the boxes.

(12) Place the truck doors on the boxes (not shown).

(13) Fold the truck tarpaulin over the doors and bows.

(14) Tie the items placed in steps 11, 12, and 13 above to the lashings and to the box handles with type III nylon cord.

Figure 2-14. Ammunition and Truck Equipment Stowed (continued)

INSTALLING OPTIONAL DRIVE-OFF AIDS ON PLATFORM

2-6. Install the drive-off aids on the platform as shown in Figure 2-15.

Note : The use of drive-off aids is optional.

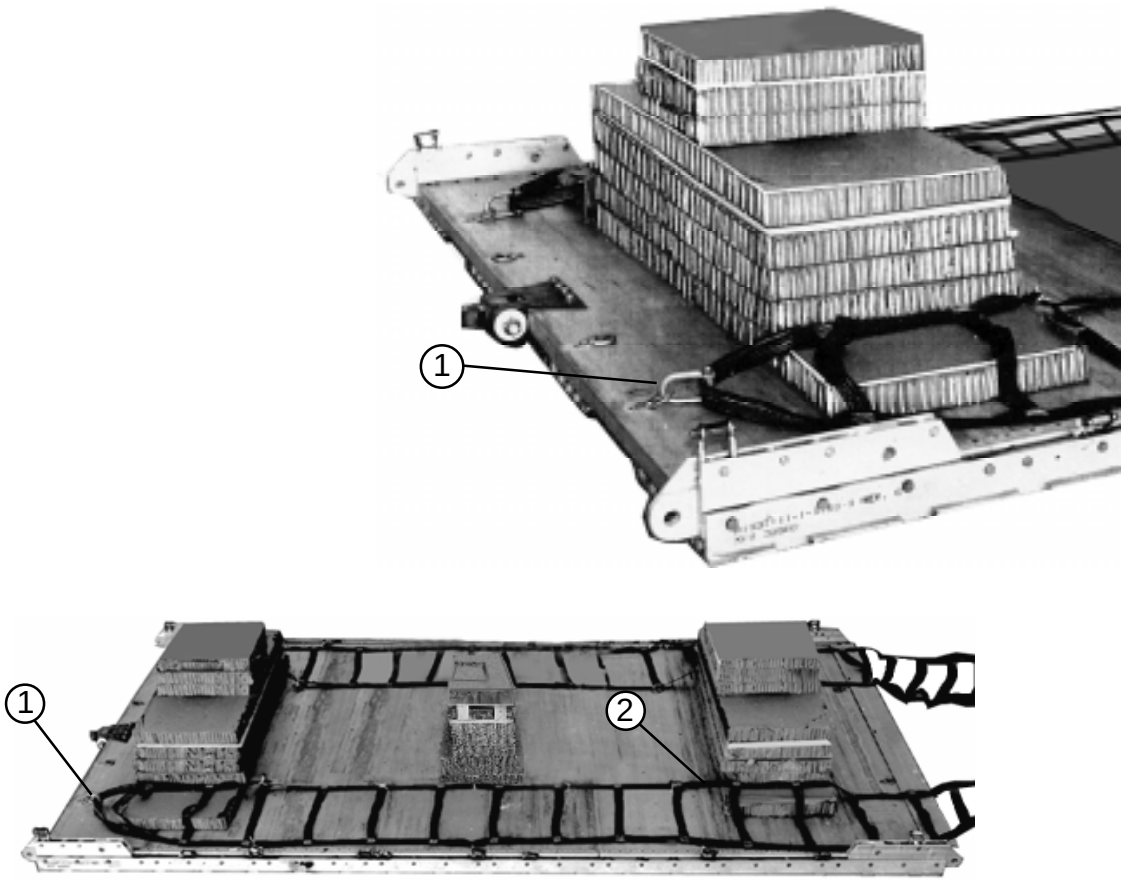

1. Attach one end of a drive-off aid to the outside rear tie-down ring on one side of the platform with a type V clevis assembly. Repeat for the other side.

2. Extend the drive-off aids to the front of the platform. Pass them over the base layers of stacks 1 and 3. Secure the drive-off aids to adjacent clevises and tie-down rings with type I, 1/4-inch cotton webbing.

Figure 2-15. Drive-off Aids Installed on Platform

LIFTING AND POSITIONING TRUCK AND INSTALLING OPTIONAL DRIVE-OFF AIDS

2-7. Install the lifting slings and position the truck on the honeycomb stacks as shown in Figure 2-16. Attach the drive-off aids to the wheels of the truck as shown in Figure 2-17, and according to FM 4-20.102/TO 13C7-1-5.

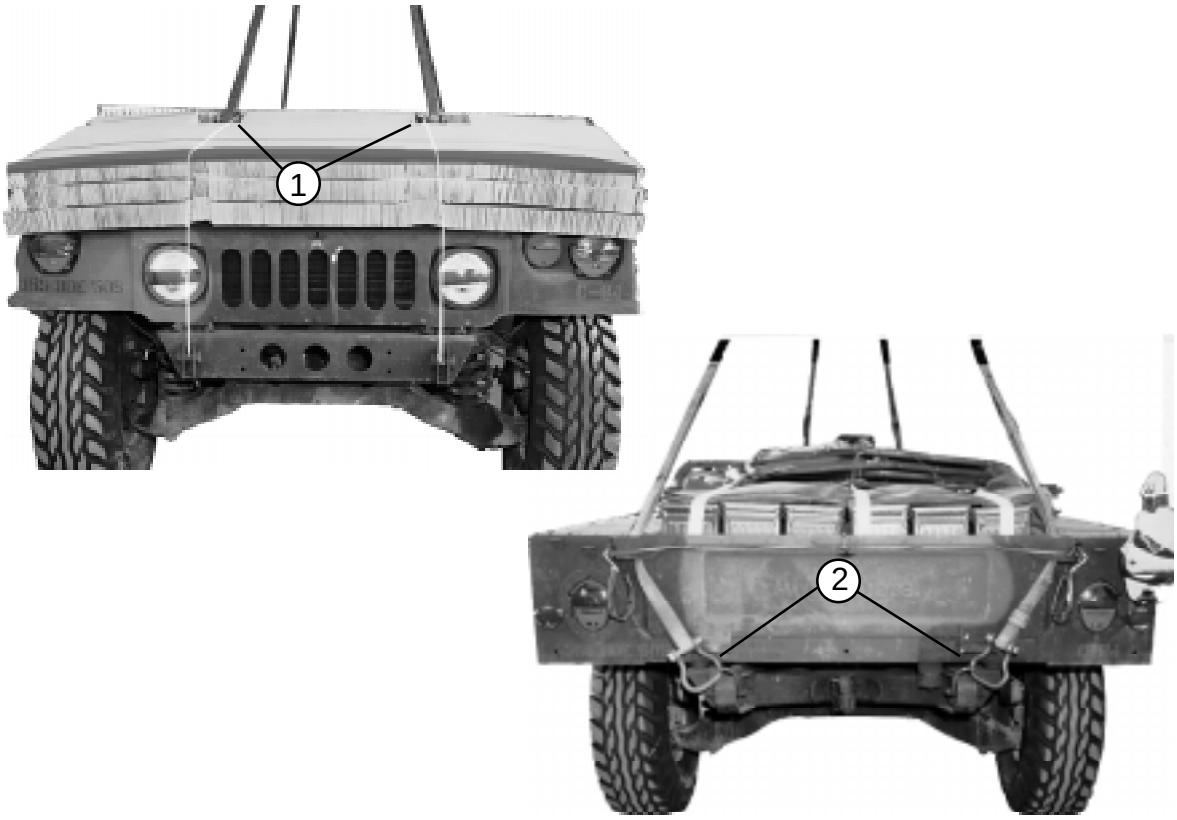

(1) Attach a 9-foot (2-loop), type XXVI nylon webbing sling to each airlift bracket with a medium clevis.

(2) Attach a 12-foot (2-loop), type XXVI nylon webbing sling to each rear lifting shackle with a medium clevis. Route the slings through the openings on each side of the tailgate.

Figure 2-16. Lifting Slings Installed and Truck Positioned

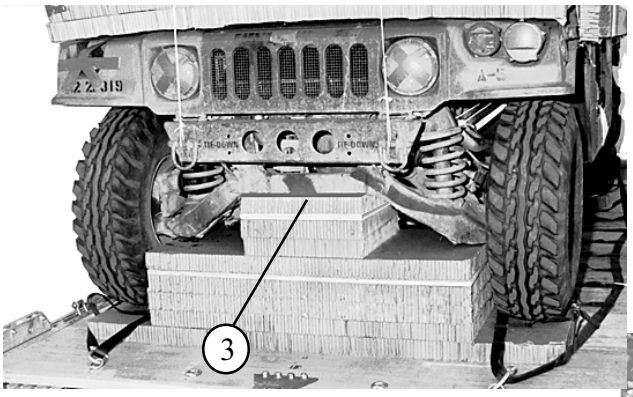

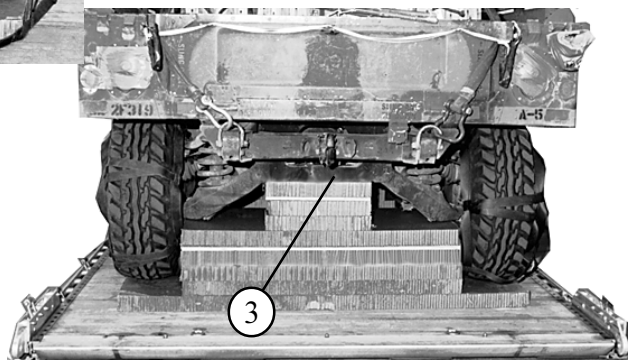

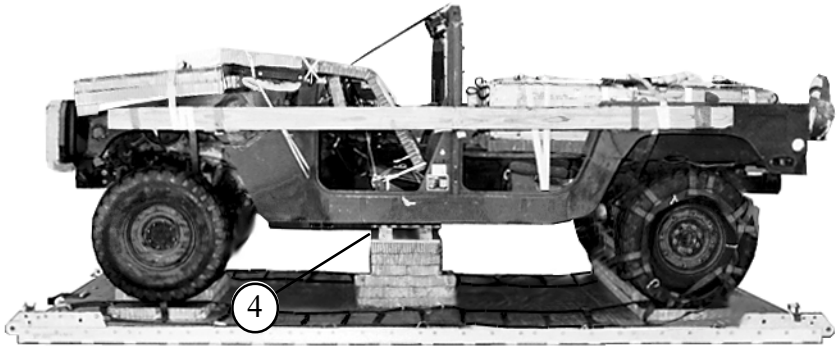

(3) Be sure that the suspension cross members of the truck rest squarely on stacks 1 and 3.

(4) Be sure that the frame cross member rests squarely on the 6-inch part of the honeycomb at the front of stack 2.

Note: If the rear wheels of the truck cannot be turned when the truck is resting on the honeycomb stacks, lift the truck slightly to allow the drive-off aids to be installed.

Figure 2-16. Lifting Slings Installed and Truck Positioned (continued)

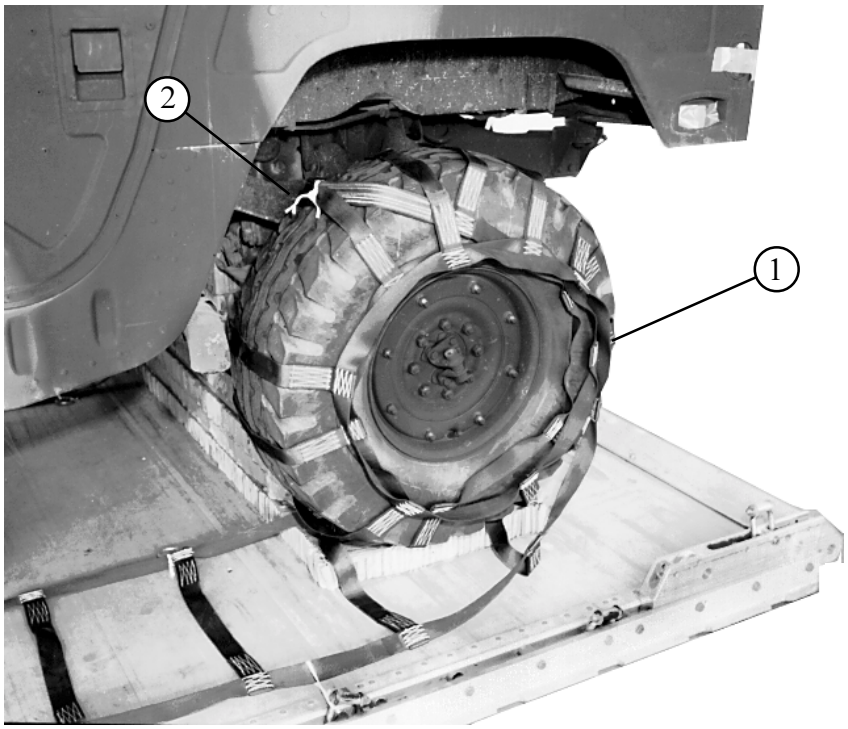

1. Place a drive-off aid under the right wheel. Holding the drive-off aid against the wheel, turn the wheel counter-clockwise until the drive-off aid is under slight tension. Repeat for the other side, but turn the wheel clockwise.

2. Tie the end loop of each drive-off aid to the nearest cross-piece with a double length of type I, 1/4-inch cotton webbing.

Figure 2-17. Drive-off Aids Attached to Wheels

LASHING TRUCK

2-8. Lash the truck to the platform with fifteen 15-foot tie-down assemblies. Install the lashings according to FM 4-20.102/TO 13C7-1-5, and as shown in Figures 2-18 and 2-19.

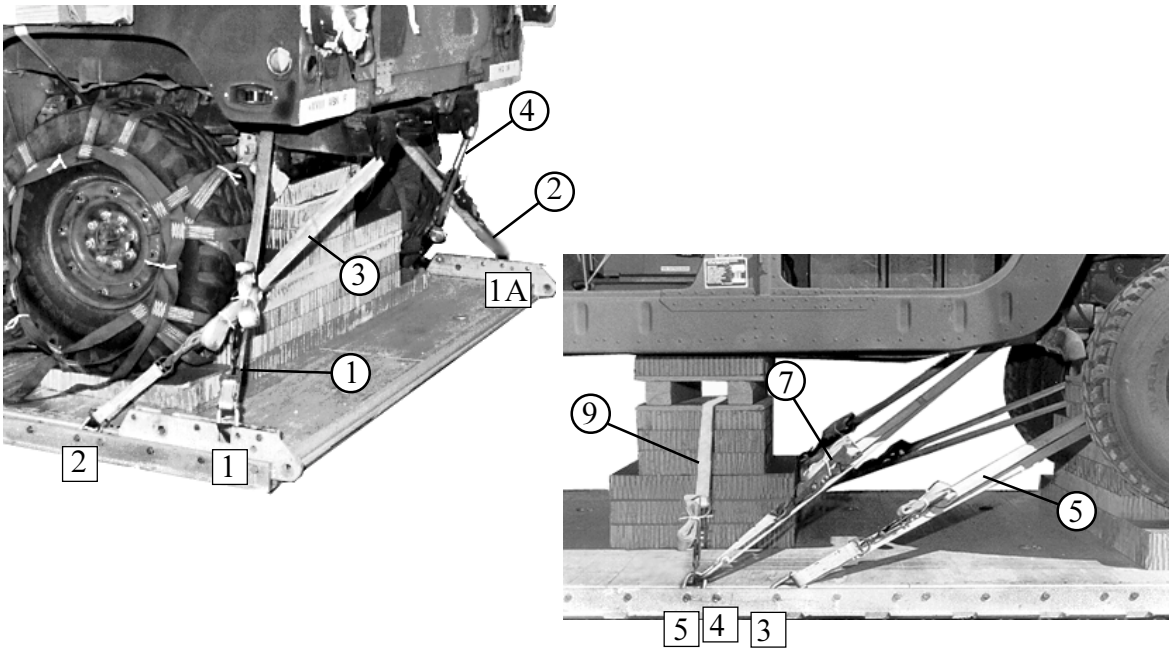

Lashing Number	Tie-down Clevis Number	Instructions
		Pass lashing:
1	1	Through tie-down bracket behind left rear coil spring.
2	1A	Through tie-down bracket behind right rear coil spring.
3	2	Through left rear lifting shackle.
4	2A	Through right rear lifting shackle.
5	3	Around left rear lower control arm.
6	3A	Around right rear lower control arm.
7	4	Through tie-down bracket in front of left rear coil spring.
8	4A	Through tie-down bracket in front of right rear coil spring.
9	5 and 5A	Pass a 15-foot lashing through clevis 5A and through its own D-ring. Pass the lashing through the hole in stack 2. Attach the lashing to clevis 5 with a load binder.

Figure 2-18. Lashings 1 through 9 Installed

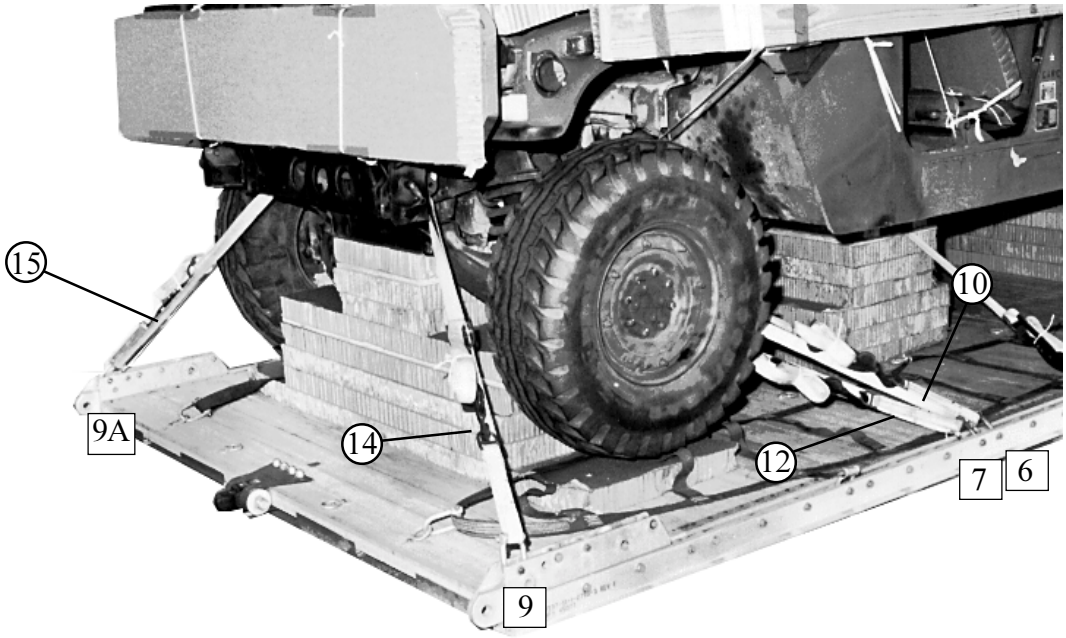

Lashing Number	Tie-down Clevis Number	Instructions
		Pass lashing:
10	6	Through tie-down bracket behind left front coil spring.
11	6A	Through tie-down bracket behind right front coil spring.
12	7	Around left lower control arm.
13	7A	Around right lower control arm.
14	9	Through tie-down bracket on end of left frame rail.
15	9A	Through tie-down bracket on end of right frame rail.

Figure 2-19. Lashings 10 through 15 Installed

INSTALLING AND SAFETY TYING SUSPENSION SLINGS

2-9. Install and safety tie four 16-foot (2-loop), type XXVI nylon webbing suspension slings according to FM 4-20.102/TO 13C7-1-5, and as shown in Figure 2-20.

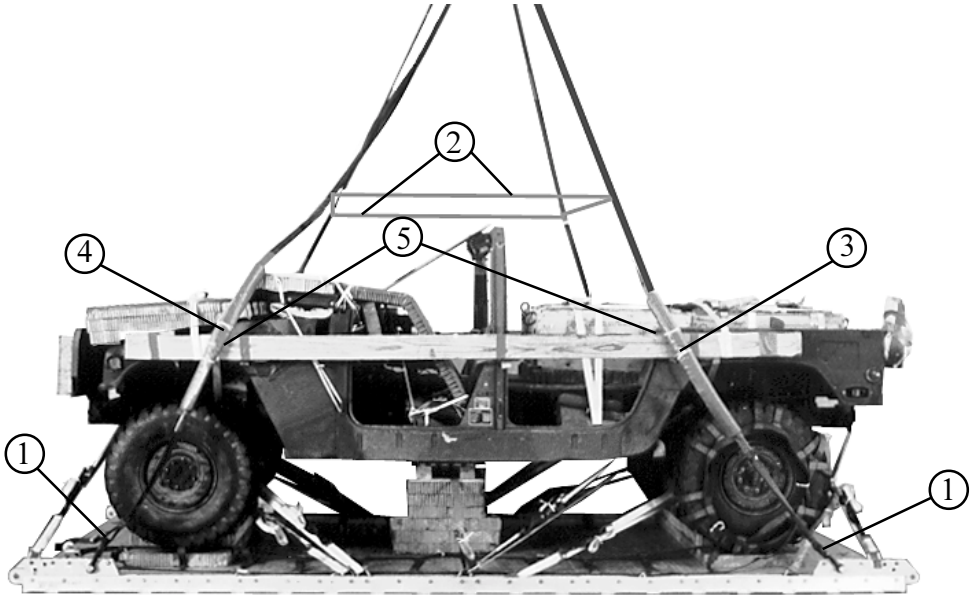

1. Attach a 16-foot (2-loop), type XXVI nylon suspension sling to each tandem link with a large clevis.
2. Raise the slings and install the deadman's tie 6 to 8 inches above the load.
3. Position a 6- by 36-inch piece of felt around each front suspension sling 40 inches from the suspension clevis. Cover the padding completely with tape, extending the tape 6 inches above and below the padding.
4. Position a 6- by 36-inch piece of felt around each rear suspension sling 36 inches from the suspension clevis. Secure the padding as described in step 3 above.
5. Safety tie each sling to the body side boards with a length of type III nylon cord.

Figure 2-20. Suspension Slings Installed, Padded, and Safety Tied

STOWING CARGO PARACHUTES

2-10. Use two G-11 cargo parachutes on this load. Prepare and stow the cargo parachutes as shown in Figure 2-21.

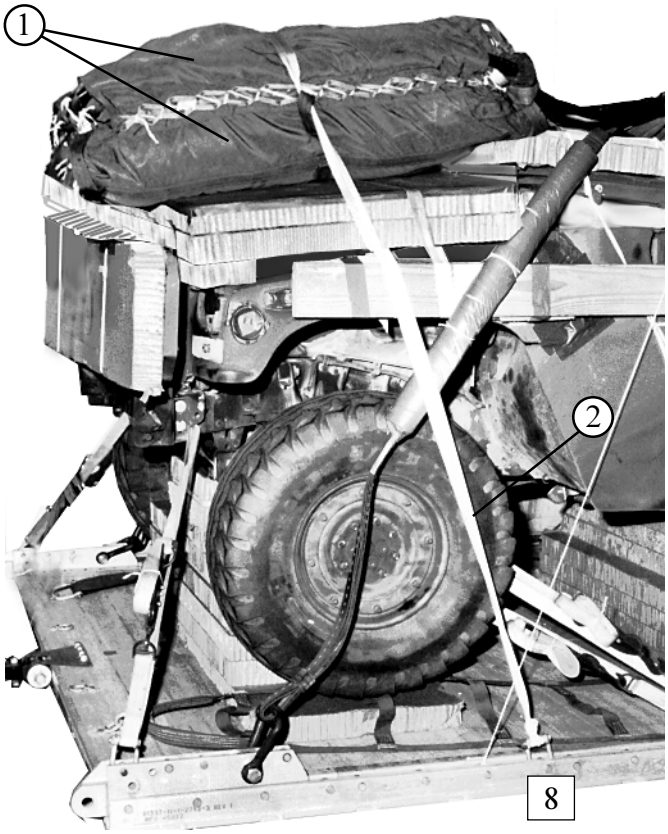

1. Prepare two G-11B cargo parachutes and stow them on the honeycomb positioned on the hood of the truck. Prepare and stow the parachutes according to FM 4-20.102/TO 13C7-1-5.

2. Install the parachute restraint strap according to FM 4-20.102/TO 13C7-1-5. Secure the restraint strap to clevises 8 and 8A.

Figure 2-21. G-11 Cargo Parachutes Stowed

INSTALLING PARACHUTE RELEASE

2-11. Prepare and install an M-1 cargo parachute release according to FM 4-20.102/TO 13C7-1-5, and as shown in Figure 2-22.

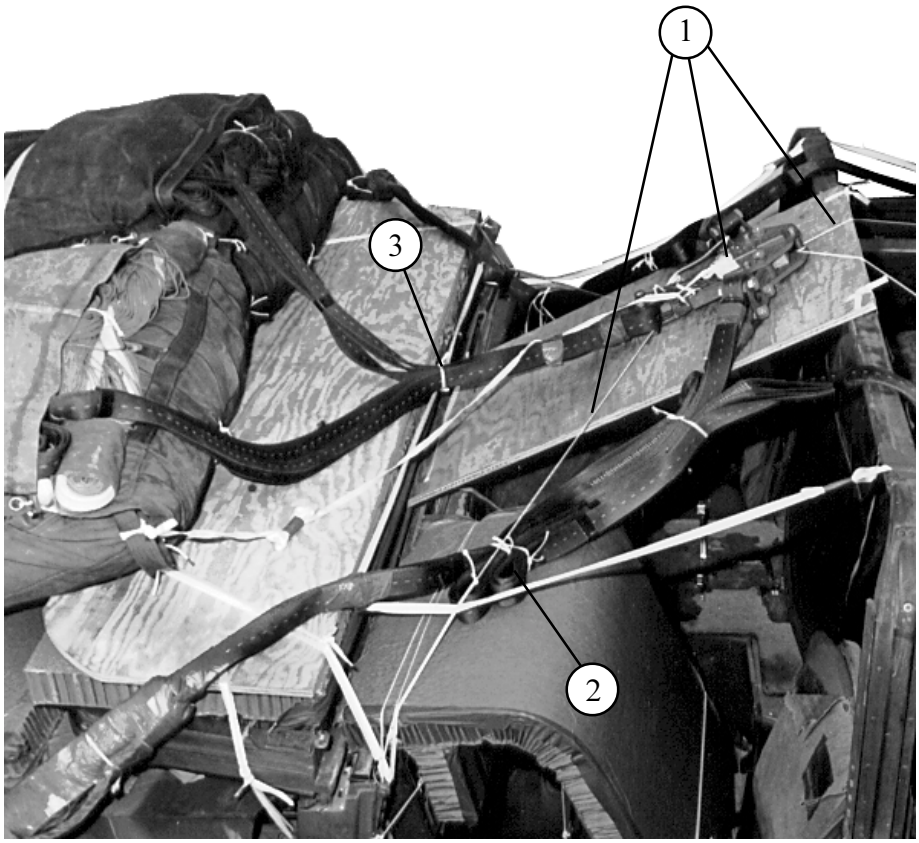

(1) Place the M-1 release on the 3/4- by 24- by 42-inch plywood over the driver compartment. Secure it to convenient points on the load with type III nylon cord.

(2) S-fold any slack in the suspension slings. Tie the folds in place with type I, 1/4-inch cotton webbing.

(3) Tie the riser extensions together with a length of type I, 1/4-inch cotton webbing.

Figure 2-22. M-1 Cargo Parachute Release Installed

INSTALLING EXTRACTION SYSTEM

2-12. Install the extraction force transfer coupling (EFTC) according to FM 4-20.102/TO 13C7-1-5, and as shown in Figure 2-23.

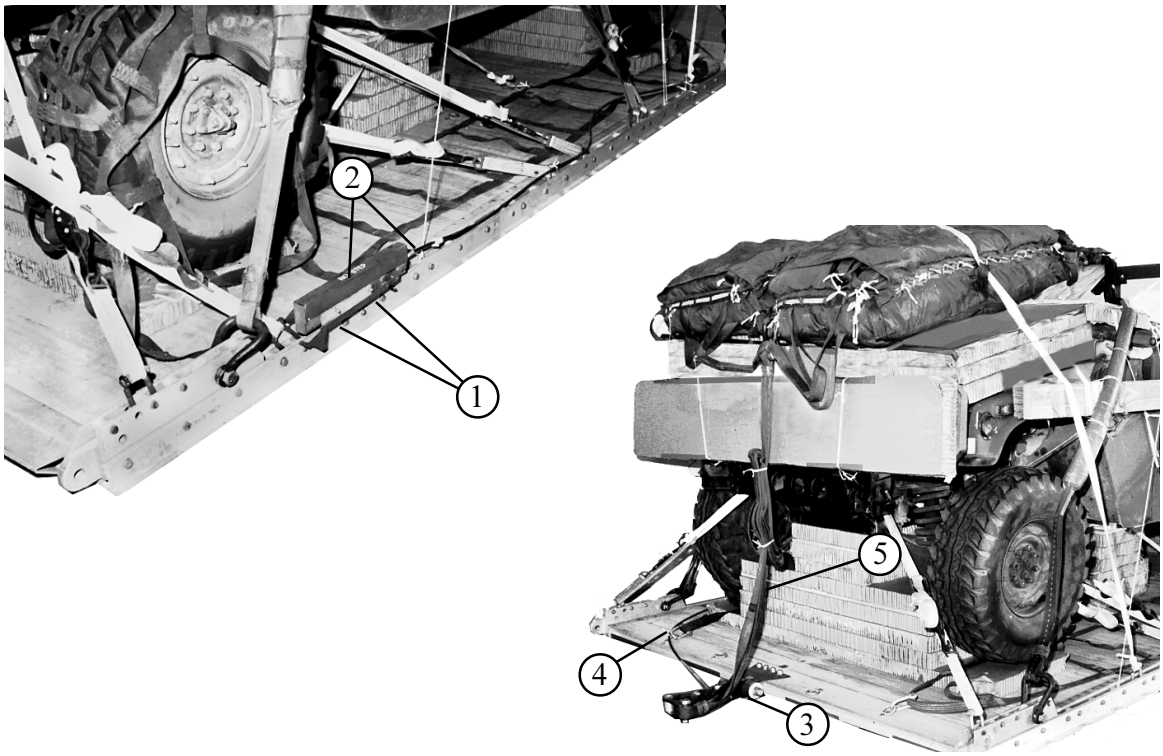

1. Install the EFTC mounting brackets in the front mounting holes in the left platform rail.
2. Attach a 16-foot release cable to the actuator. Install the actuator to the EFTC mounting brackets.
3. Install the latch assembly to the extraction bracket. Attach the release cable to the latch assembly.
4. Tie the release cable to tie-down ring D8 on the rear platform panel with a length of type I, 1/4-inch cotton webbing.
5. Install a 9-foot (2-loop), type XXVI nylon webbing deployment line on the load.

Figure 2-23. EFTC Installed

INSTALLING PROVISIONS FOR EMERGENCY RESTRAINTS

2-13. Select and install provisions for emergency restraint according to the emergency aft restraint requirements table in FM 4-20.102/TO 13C7-1-5.

PLACING EXTRACTION PARACHUTE

2-14. Select the extraction parachute and extraction line needed using the extraction line requirements table in FM 4-20.102/TO13C7-1-5. Rig the extraction line in an extraction line bag according to TM 10-1670-286-20/TO 13C5-2-41. Place the extraction parachute and extraction line on the load for installation in the aircraft.

MARKING RIGGED LOAD

2-15. Mark the rigged load according to FM 4-20.102/TO 13C7-1-5 and as shown in Figure 2-24. Complete Shipper's Declaration for Dangerous Goods according to AFJMAN 24-204/TM 38-250. If the load varies from the one shown, the weight, height, CB, tip-off curve, and parachute requirements must be recomputed.

EQUIPMENT REQUIRED

2-16. Use the equipment listed in Table 2-1 to rig this load. The equipment for rigging an accompanying load is NOT given in Table 2-1.

CAUTION
Make the final rigger inspection required by FM 4-20.102/ TO 13C7-1-5 before the load leaves the rigging site.

Note: This load includes a 1,800-pound accompanying load.

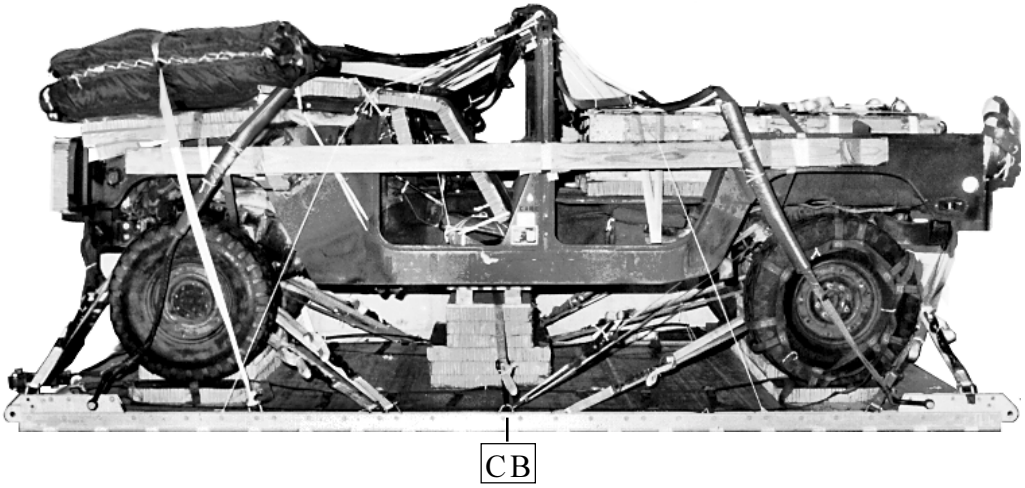

RIGGED LOAD DATA

Weight: Load shown	9,750 pounds
Maximum load allowed	10,500 pounds
Height (with two G-11B parachutes)	86 inches
Width	108 inches
Length (overall)	215 inches
Overhang: Front	0 inches
Rear (EFTC)	18 inches
CB (from front edge of platform)	95 inches

Figure 2-24. M998 Cargo/Troop Carrier Rigged for Low-Velocity Airdrop

Table 2-1. Equipment Required for Rigging the M998 Cargo/Troop Carrier on a 16-Foot Platform

National Stock Number	Item	Quantity
8040-00-273-8713	Adhesive, paste, 1-gal	As required
4030-00-090-5354	Clevis, suspension, 1-in (large)	5
4020-00-240-2146	Cord, nylon, type III, 550-lb	As required
1670-00-434-5785	Coupling assembly, airdrop, extraction force transfer with cable, 16-ft	1
	Cover:	
1670-00-360-0328	Clevis, large	1
8135-00-664-6958	Cushioning material, packaging, cellulose wadding	As required
8305-00-958-3685	Felt, 1/2-in thick	As required
1670-01-183-2678	Leaf, extraction line (line bag)	2
	Line, drogue (for C-17)	
1670-01-062-6313	60-ft (3-loop), type XXVI	1
	Line, extraction:	
1670-01-062-6313	For C-130: 60-ft (3-loop), type XXVI	1
1670-01-107-7651	For C-141: 140-ft (3-loop), type XXVI	1
	For C-5:	
1670-01-062-6313	60-ft, (3-loop), type XXVI and	1
1670-01-107-7651	140-ft (3-loop), type XXVI	1
	For C-17:	
1670-01-107-7651	140-ft (3-loop), type XXVI	1
	Link Assembly:	
	Two-point:	1
5306-00-435-8994	Bolt, 1-in diam, 4-in long	(2)
5310-00-232-5165	Nut, 1-in, hexagonal	(2)
1670-00-003-1953	Plate, side, 3 3/4-in	(2)
5365-00-007-3414	Spacer, large	(2)
	Lumber:	
5510-00-220-6448	2- by 6-in	As required
5510-00-220-6274	4- by 4-in	As required
5315-00-010-4659	Nail, steel wire, 8d	As required

Table 2-1. Equipment Required for Rigging the M998 Cargo/Troop Carrier on a 16-Foot Platform (continued)

National Stock Number	Item	Quantity
1670-00-753-3928	Pad, energy-dissipating (honeycomb)	
	3- by 36- by 96-in	10 sheets
	Parachute:	
	Cargo:	
1670-01-016-7841	G-11B	2
	Cargo extraction:	
1670-01-063-3716	22-ft (for C-17, use H-block with this parachute.)	1
	Drogue (for C-17)	
1670-01-063-3715	15-ft	1
	Platform, airdrop, type V, 16-ft	
1670-01-353-8425	Bracket assembly, coupling	(1)
1670-01-162-2372	Clevis assembly, type V	(20)
1670-01-162-2376	Extraction bracket assembly	(1)
1670-01-162-2381	Tandem link assembly (Multipurpose link)	(4)
5530-00-128-4981	Plywood, 3/4-in	3 sheets
1670-01-097-8816	Release, cargo parachute, M-1	1
	Sling, cargo, airdrop	
	For suspension:	
1670-01-063-7761	16-ft (2-loop), type XXVI nylon webbing	4
	For lifting:	
1670-01-062-6304	9-ft (2-loop), type XXVI nylon webbing	2
1670-01-062-6303	12-ft (2-loop), type XXVI nylon webbing	2
	For deployment:	
1670-01-062-6304	9-ft (2-loop), type XXVI nylon webbing	1
	For riser extension:	
1670-01-062-6302	20-ft (2-loop), type XXVI nylon webbing	2
5340-00-040-8219	Strap, parachute release, multi-cut, comes w/ 3 knives	2
7510-00-266-5016	Tape, adhesive, 2-in	As required
1670-00-937-0271	Tie-down assembly, 15-foot	19
1670-01-344-0825	Vehicle drive-off aid	1
	Webbing:	
8305-00-268-2411	Cotton, 1/4-in, type I	As required
8305-00-082-5752	Nylon, tubular, 1/2-in	As required
8305-00-263-3591	Type VIII	As required

CHAPTER 3

RIGGING ARMAMENT CARRIERS FOR LOW-VELOCITY AIRDROP

SECTION I - RIGGING CARRIERS ON A 16-FOOT PLATFORM

DESCRIPTION OF LOAD

3-1. The unrigged M1025 armament carrier (Figure 3-1) is described in Chapter 1. The truck is rigged on a 16-foot type V platform for low-velocity airdrop. An accompanying load weighing a minimum of 800 pounds and a maximum of 2,000 pounds must be rigged in the truck. The load requires two G-11 cargo parachutes.

The following trucks can be rigged using the procedures given in this chapter:
M1025A1, M1025A2, and M1025A2 modified
M1026, M1026 (modified) and M1026A1
M966 and M966A1
M1036
M1043, M1043A1, and M1043A2
M1044 and M1044A1
M1045, M1045A1, and M1045A2
M1046 and M1046A1
M1121

PREPARING PLATFORM

3-2. Prepare a 16-foot, type V airdrop platform using four tandem links and 18 load tie-down clevises as shown in Figure 2-2.

Notes: 1. The nose bumper may or may not be installed.
2. Measurements given in this chapter are from the front edge of the platform, NOT from the front edge of the nose bumper.

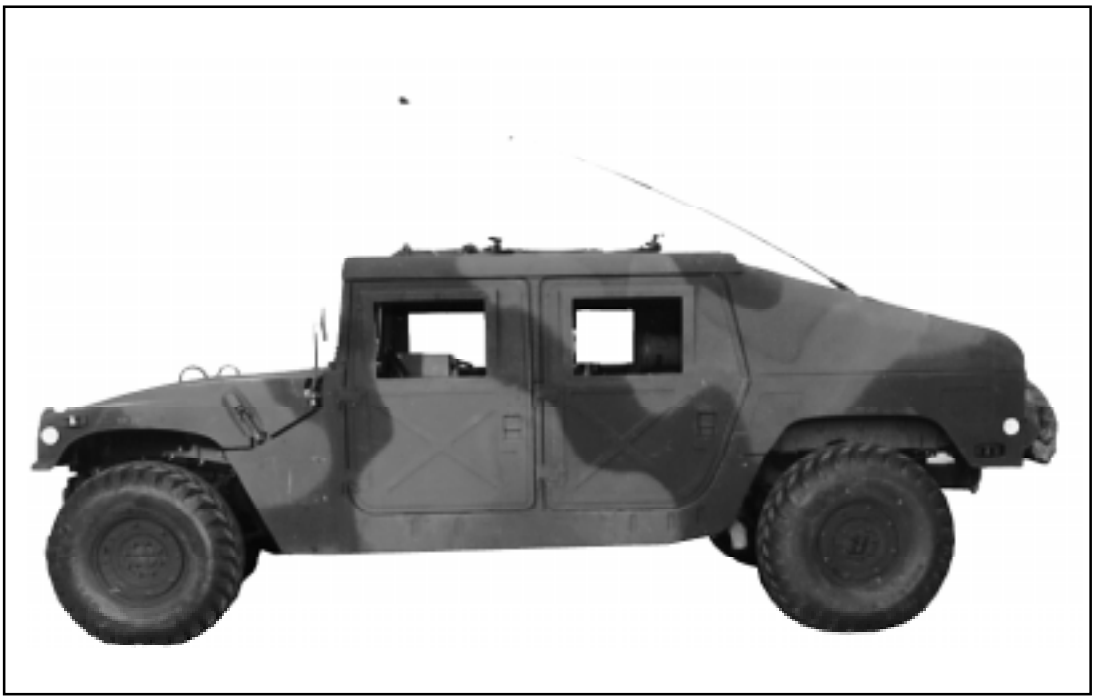

Figure 3-1. M1025 Armament Carrier

PREPARING AND POSITIONING HONEYCOMB STACKS

3-3. Prepare three honeycomb stacks as shown in Figures 2-3 and 2-4. Position the stacks on the platform as shown in Figure 2-5, and according to FM 4-20.102/TO 13C7-1-5.

PREPARING TRUCK

3-4. Prepare the truck as described in paragraphs 2-4a through e, g, and h, and as shown in Figures 2-6 and 2-7, 2-8 (omit steps 1 and 3), 2-9, 2-11, and 2-12. Further prepare the closed-body HMMWV as shown in Figures 3-2 and 3-3.

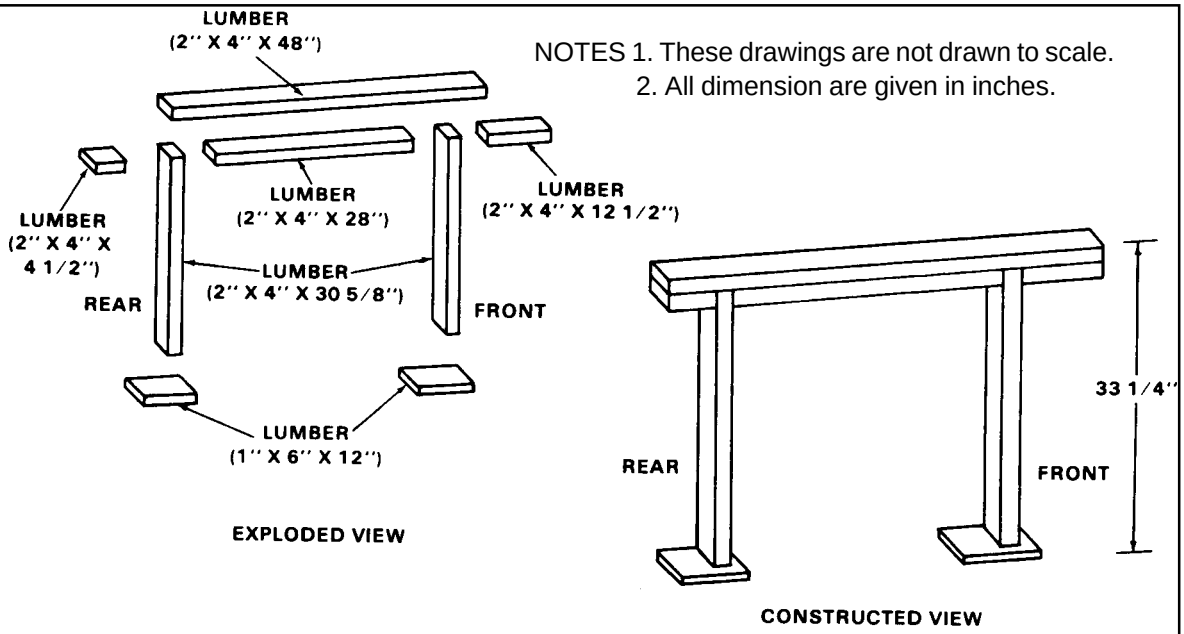

NOTES 1. These drawings are not drawn to scale.
2. All dimension are given in inches.

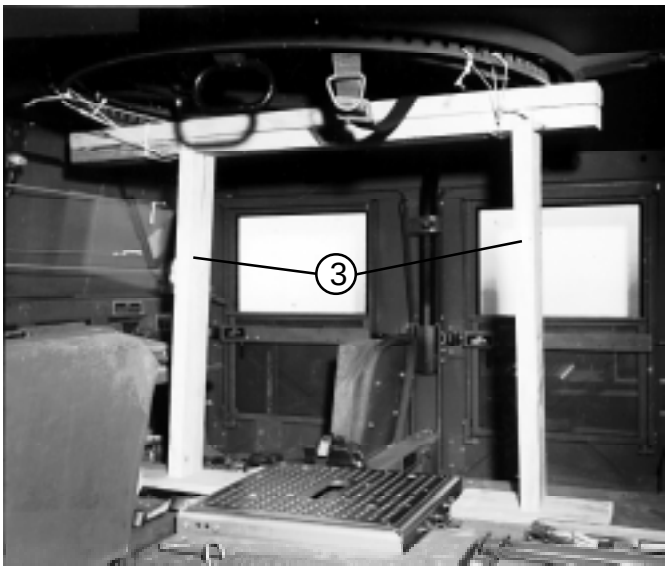

1. Build the turret housing support as shown. Nail the lumber together with 8d nails.
2. Close the turret cover and secure it with the fasteners provided (not shown).
3. Center the support under the turret housing with the front end of the support toward the front end of the truck. Tie the support in place with two lengths of type III nylon cord.

Figure 3-2. Turret Support Built and Placed

NOTES 1. These drawings are not to scale.
2. All dimension are given in inches.

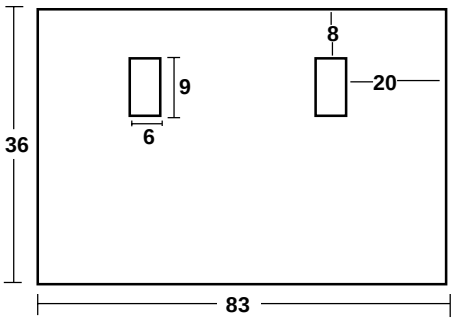

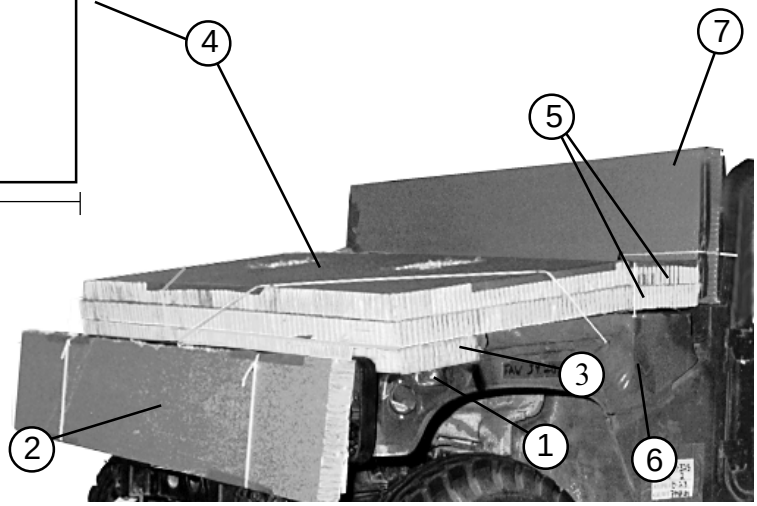

1. Tape all lights and reflectors.
2. On trucks equipped with the brush guard, cover the front side with a 83- by 14-inch piece of honeycomb tied in place with type III nylon cord.
3. Center a 78- by 4-inch piece of honeycomb along the front edge of the hood.
4. Place two 36- by 83-inch pieces of honeycomb, with cutouts as shown, over the hood. Tape the upper edges of the top piece. Tie the honeycomb in place with a length of type III nylon cord. Tie the cord to a hood latch, pass it through the grille, and tie off to the other hood latch.
5. Place two 83- by 12-inch pieces of honeycomb just behind the honeycomb placed in step 2 above. Tape the top outside edges. Secure the honeycomb to the hood latch brackets with type III nylon cord.
6. Tape the hood latches.
7. Lower all side windows and open the truck doors. Place a 21- by 83-inch piece of honeycomb against the windshield. Tie a length of type III nylon cord around the honeycomb and the inside of the windshield frame.

Figure 3-3. Truck Body Prepared

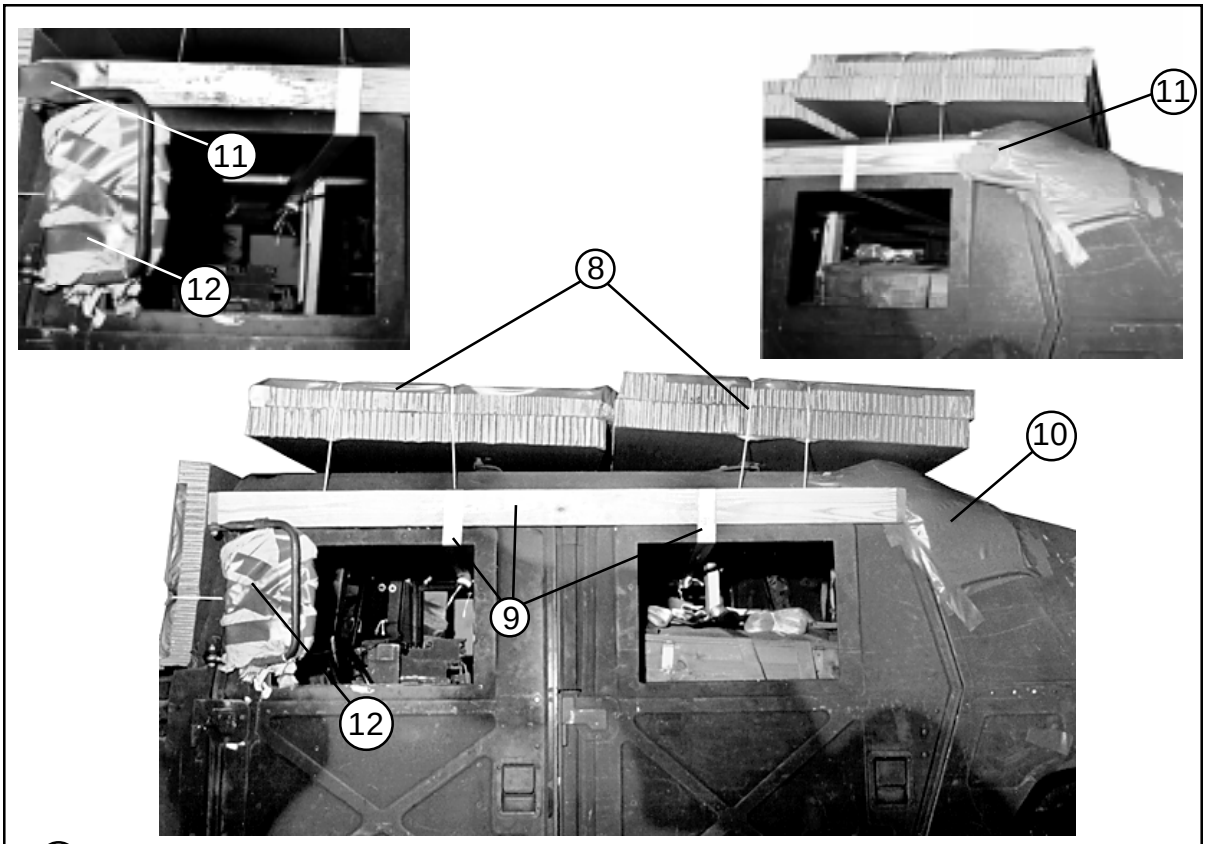

(8) Cover the roof with four 82- by 36-inch pieces of honeycomb. Tape the upper 36-inch edges. Tie four lengths of type III nylon cord over the honeycomb and through the door openings.

(9) Pass 15-foot lashings through the door openings on each side of the truck and close the doors. Cut a 45-degree bevel in each end of two pieces of 2- by 4- by 69 1/2-inch lumber. Rest the long side of each piece of lumber over the window openings and even with the front edge of the windshield frame. Pass the free ends of the lashings down over the lumber and through the windows. Secure the lashings inside the truck.

(10) Pad the upper rear corner of the door and the end of the rain gutter with a 12- by 12-inch piece of felt taped in place.

(11) Tape the front and rear ends of the lumber to the windshield frame and to the padding over the rear gutter.

(12) Pad the mirrors with cellulose wadding taped in place. Fold the mirrors inward and tie them together through the cab of the truck.

Figure 3-3. Truck Body Prepared (continued)

STOWING ACCOMPANYING LOAD

3-5. Stow an accompanying load of 800 to 2,000 pounds in the cargo area of the truck. Use or adapt the procedures shown in Figure 3-4. Make sure the accompanying load complies with the restrictions outlined in FM 4-20.102/TO 13C7-1-5. The maximum restraint capacity of each cargo area tie-down ring is 2,000 pounds. The accompanying load of ammunition shown in Figure 3-4 weighs 930 pounds.

CAUTION

Only ammunition listed in FM 10-500-53/MCRP 4-3.81/TO 13C7-18-41 may be airdropped. Package, mark, and label hazardous material according to AFJMAN 24-204/TM 38-250.

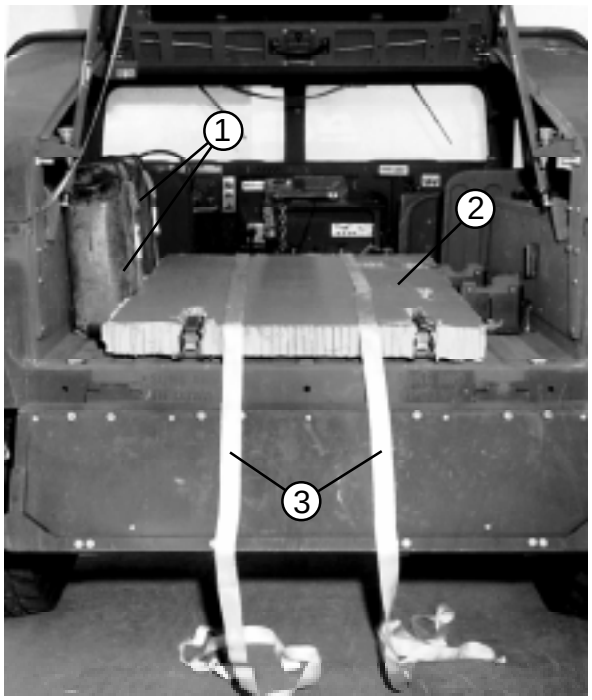

1. Stow two water cans in their holders, and secure them with the straps provided.
2. Lay a 36- by 50-inch piece of honeycomb in the cargo area. Make cutouts in the honeycomb for fixtures on the floor.
3. Lay two 15-foot lashings lengthwise on the honeycomb.

Figure 3-4. Accompanying load stowed in truck

4 Place the accompanying load (20-millimeter ammunition shown) on the honeycomb.

5 Fasten the pre-positioned lashings (step 3) on the front side of the boxes with D-rings and load binders.

6 Run a 15-foot lashing around the boxes through their carrying handles. Secure the lashing with a D-ring and a load binder.

Figure 3-4. Accompanying Load Stowed in Truck (continued)

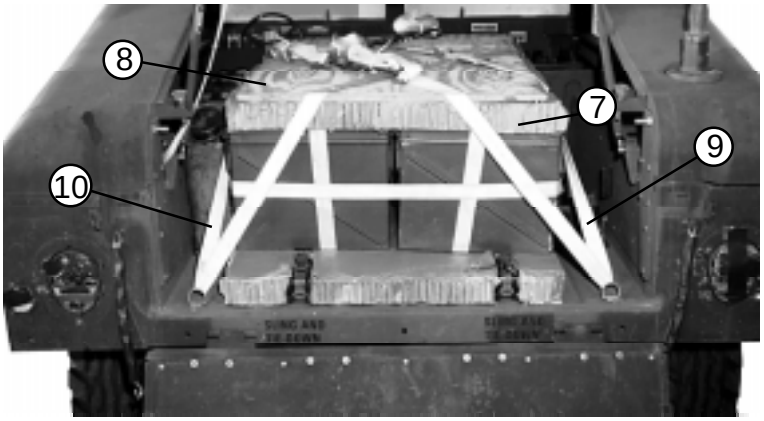

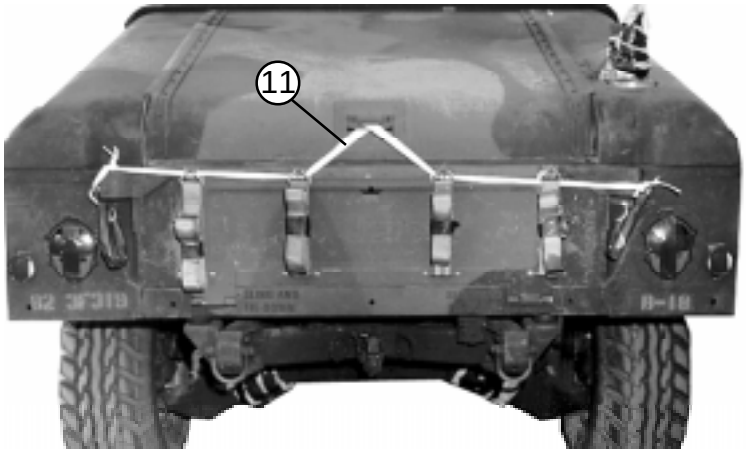

(7) Lay a 36- by 40-inch piece of honeycomb flush over the boxes of ammunition.

(8) Lay a 3/4- by 36- by 40-inch piece of plywood flush over the honeycomb.

(9) Run a 30-foot lashing through the right rear tie-down ring. Bring both ends over the boxes diagonally. Run the lashing through the left front tie-down ring. Secure the lashing over the load.

(10) Repeat step 9 using the left rear and right front tie-down rings.

Note: Stow truck equipment such as antennas on top of the load. Tie the equipment securely.

(11) Close and latch the tailgate and hatch. Fold and tape the cargo straps. Run a length of 1/2-inch tubular nylon webbing under the cargo straps and through the hatch cover handle. Tie to the tailgate hook brackets.

Figure 3-4. Accompanying Load Stowed in Truck (continued)

LIFTING AND POSITIONING TRUCK AND INSTALLING OPTIONAL DRIVE-OFF AIDS

3-6. Install the optional drive-off aids on the platform as shown in Figure 2-16. Install lifting slings on the truck and position the truck on the platform as shown in Figure 2-16. Attach the driveoff aids to the wheels as shown in Figure 2-17.

LASHING TRUCK

3-7. Lash the truck to the platform with fifteen 15-foot tie-down assemblies. Install the lashings according to FM 4-20.102/TO 13C7-1-5, and as shown in Figures 2-18 and 2-19.

INSTALLING AND SAFETY TYING SUSPENSION SLINGS

3-8. Install and safety tie four 16-foot (2-loop), type XXVI nylon suspension slings according to FM 4-20.102/TO 13C7-1-5, and as shown in Figure 3-5.

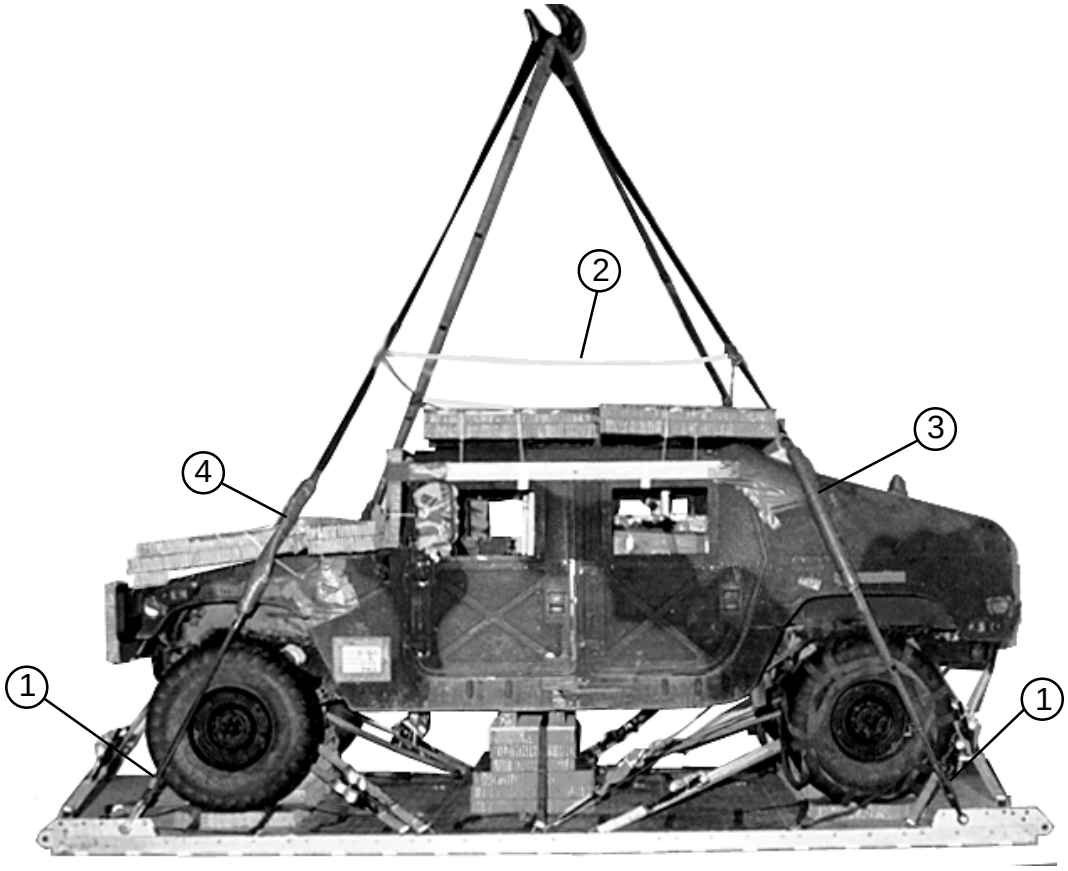

1. Attach a 16-foot (2-loop), type XXVI nylon suspension sling to each tandem link with a large clevis.
2. Raise the slings and install the deadman's tie 6 to 8 inches above the load.
3. Position a 6- by 36-inch piece of felt around each front suspension sling 40 inches from the suspension clevis. Cover the padding completely with tape, extending the tape 6 inches above and below the padding.
4. Position a 6- by 36-inch piece of felt around each rear suspension sling 45 inches from the suspension clevis. Secure the padding as described in step 3 above.

Figure 3-5. Suspension Slings Installed, Padded and Safety Tied

STOWING CARGO PARACHUTES

3-9. Use two G-11 cargo parachutes on this load. Stow the cargo parachutes according to FM 4-20.102/TO 13C7-1-5, and as shown in Figure 2-21.

INSTALLING PARACHUTE RELEASE

3-10. Prepare and install an M-1 cargo parachute release according to FM 4-20.102/TO 13C7-1-5, and as shown in Figure 3-6.

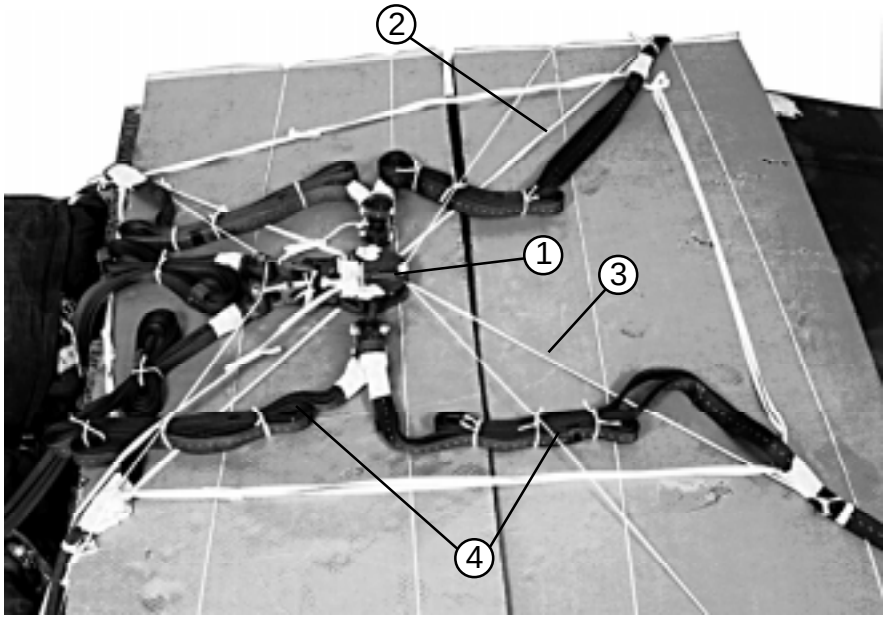

1. Place the M-1 release on the honeycomb in front of the parachutes. Tie the release to convenient points on the load.
2. Tie a length of Type I, 1/4-inch cotton webbing to the right rear suspension sling below the deadman's tie. Bring the webbing diagonally over the load to the left front. Pull it taut, and tie it to the left front sling below the deadman's tie.
3. Tie the left rear and right front suspension slings together in the same way as outlined in step 2 above.
4. S-fold the slack in the suspension slings, and tie the folds with Type I, 1/4-inch cotton webbing. Attach the suspension slings and the riser extensions to the release.

Figure 3-6. M-1 Cargo Parachute Release Installed

INSTALLING EXTRACTION SYSTEM

3-11. Install the EFTC extraction system with a 16-foot release cable according to FM 4-20.102/TO 13C7-1-5, and as shown in Figure 2-23.

INSTALLING PROVISIONS FOR EMERGENCY RESTRAINTS

3-12. Install the provisions for emergency restraints on the load according to FM 4-20.102/TO 13C7-1-5.

PLACING EXTRACTION PARACHUTE

3-13. Select the extraction parachute and extraction line needed using the extraction line requirements table in FM 4-20.102/TO 13C7-1-5. Rig the extraction line in an extraction line bag according to TM 10-1670-286-20/TO 13C5-2-41. Place the extraction parachute and extraction line on the load for installation in the aircraft.

MARKING RIGGED LOAD

3-14. Mark the rigged load according to FM 4-20.102/TO 13C7-1-5, and as shown in Figure 3-7. Complete Shipper's Declaration for Dangerous Goods according to AFJMAN 24-204/TM 38-250. If the load varies from the one shown, the weight, height, CB, and parachute requirements must be recomputed.

EQUIPMENT REQUIRED

3-15. Use the equipment listed in Table 3-1 to rig this load. The equipment for rigging the accompanying load is NOT given in Table 3-1.

CAUTION
Make the final rigger inspection required by FM 4-20.102/ TO 13C7-1-5 before the load leaves the rigging site.

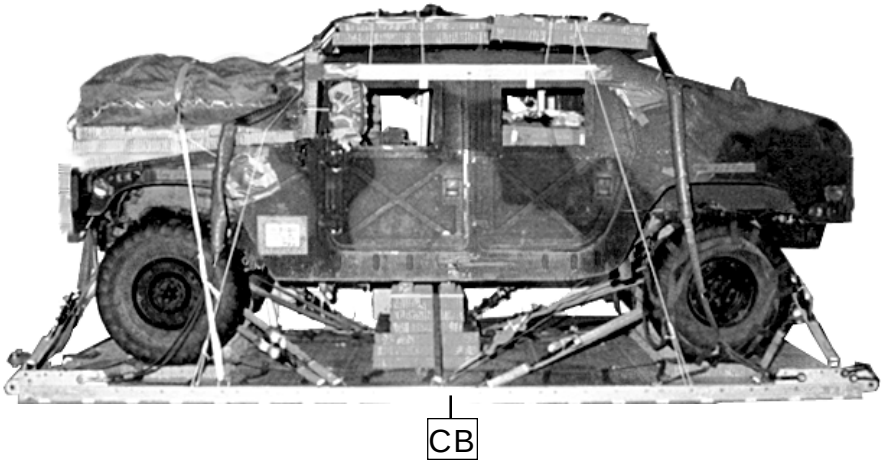

RIGGED LOAD DATA

Weight: Load shown	9,820 pounds
Maximum load allowed	10,500 pounds
Height (with two G-11 parachutes)	91 inches
Width	108 inches
Length (overall)	215 inches
Overhang: Front	0 inches
Rear (EFTC)	18 inches
CB (from front edge of platform)	96 inches

Figure 3-7. M1025 Armament Carrier Rigged for Low-Velocity Airdrop on a 16-Foot Platform

Table 3-1. Equipment Required for Rigging Armament Carrier on a 16-Foot Platform

National Stock Number	Item	Quantity
8040-00-273-8713	Adhesive, paste, 1-gal	As required
4030-00-090-5354	Clevis, suspension, 1-in (large)	5
4020-00-240-2146	Cord, nylon, type III, 550-lb	As required
1670-00-434-5785	Coupling assembly, airdrop, extraction force transfer with cable, 16-ft	1
	Cover:	
1670-00-360-0328	Clevis, large	1
8135-00-664-6958	Cushioning material, packaging, cellulose wadding	As required
8305-00-958-3685	Felt, 1/2-in thick	As required
1670-01-183-2678	Leaf, extraction line (line bag)	2
	Line, drogue (for C-17)	
1670-01-064-4452	60-ft (1-loop), type XXVI	1
	Line, extraction:	
1670-01-062-6313	For C-130: 60-ft (3-loop), type XXVI	1
1670-01-107-7651	For C-141: 140-ft (3-loop), type XXVI	1
	For C-5:	
1670-01-062-6313	60-ft, (3-loop), type XXVI and	1
1670-01-107-7651	140-ft (3-loop), type XXVI	1
	For C-17:	
1670-01-107-7651	140-ft (3-loop), type XXVI	1
	Link Assembly:	1
5306-00-435-8994	Two-point:	(2)
5310-00-232-5165	Bolt, 1-in diam, 4-in long	(2)
1670-00-003-1953	Nut, 1-in, hexagonal	(2)
5365-00-007-3414	Plate, side, 3 3/4-in	(2)
	Spacer, large	
	Lumber:	
5510-00-220-6146	2- by 4-in	As required
5510-00-220-6448	2- by 6-in	As required
5510-00-220-6274	4- by 4-in	As required
5315-00-010-4659	Nail, steel wire, 8d	As required

Table 3-1. Equipment Required for Rigging Armament Carrier on a 16-Foot Platform (continued)

National Stock Number	Item	Quantity
1670-00-753-3928	Pad, energy-dissipating (honeycomb) 3- by 36- by 96-in	13 sheets
	Parachute:	
	Cargo:	
1670-01-016-7841	G-11B	2
	Cargo extraction:	
1670-01-063-3716	22-ft (Use with H-block for C-17.)	1
	Drogue (for C-17)	
1670-01-063-3715	15-ft	1
	Platform, airdrop, type V, 16-ft	
1670-01-353-8425	Bracket assembly, coupling	(1)
1670-01-162-2372	Clevis assembly, type V	(20)
1670-01-162-2376	Extraction bracket assembly	(1)
1670-01-162-2381	Tandem link assembly (Multipurpose link)	(4)
5530-00-128-4981	Plywood, 3/4-in	3 sheets
1670-01-097-8816	Release, cargo parachute, M-1	1
	Sling, cargo, airdrop	
	For suspension:	
1670-01-063-7761	16-ft (2-loop), type XXVI nylon webbing	4
	For lifting:	
1670-01-062-6304	9-ft (2-loop), type XXVI nylon webbing	2
1670-01-062-6303	12-ft (2-loop), type XXVI nylon webbing	2
	For deployment:	
1670-01-062-6304	9-ft (2-loop), type XXVI nylon webbing	1
	For riser extension:	
1670-01-062-6302	20-ft (2-loop), type XXVI nylon webbing	2
5340-00-040-8219	Strap, parachute release, multi-cut, comes w/ 3 knives	2
7510-00-266-5016	Tape, adhesive, 2-in	As required
1670-00-937-0271	Tie-down assembly, 15-foot	21
1670-01-344-0825	Vehicle drive-off aid	1
	Webbing:	
8305-00-268-2411	Cotton, 1/4-in, type I	As required
8305-00-082-5752		As required
8305-00-263-3591		As required

SECTION II - RIGGING CARRIERS ON A 20-FOOT PLATFORM WITH ADDITIONAL ACCOMPANYING AMMUNITION LOAD

DESCRIPTION OF LOAD

3-16. The unrigged M1025 armament carrier (Figure 3-1) is described in Chapter 1. The truck and an accompanying load are rigged on a 20-foot type V platform for low-velocity airdrop. A load weighing a minimum of 800 pounds and a maximum of 2,000 pounds must be rigged in the truck. The load requires three G-11 cargo parachutes. The armament carriers listed on page 3-1 can be rigged using the procedures in this section.

PREPARING PLATFORM

3-17. Prepare a 20-foot, type V airdrop platform according to TM 10-1670-268-20&P/TO 13C7-52-22. Install four tandem links, two suspension links and 32 load tie-down clevises as shown in Figure 3-8.

Notes: 1. The nose bumper may or may not be installed.
2. Measurements given in this chapter are from the front edge of the platform, NOT from the front edge of the nose bumper.

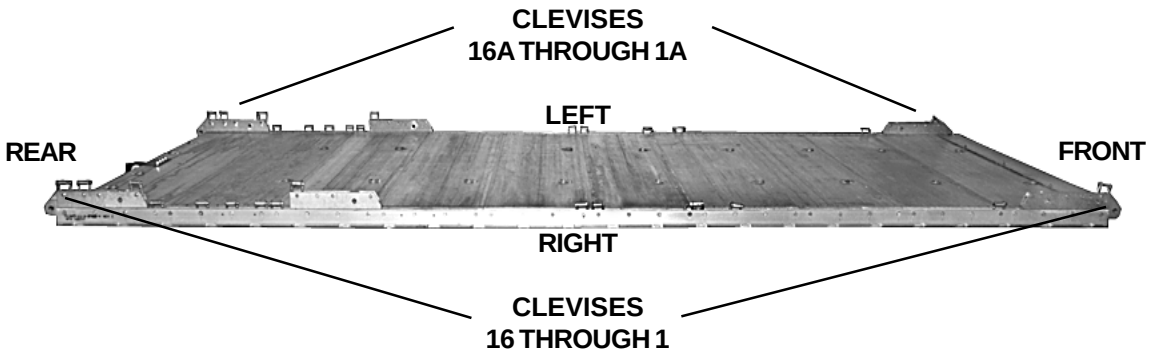

Step:

1. Install a tandem link on the front of each platform side rail using holes 1, 2, and 3.
2. Install a suspension link to each platform side rail using holes 29, 30, and 31.
3. Install a tandem link on the rear of each platform side rail using holes 38, 39, and 40.
4. Install a clevis on bushing 1of each front tandem link.
5. Install a clevis on bushing 4 of each suspension link.
6. Install clevises on bushings 1, 3 and 4 of each rear tandem link.
7. Starting at the front of the platform, install clevises on each platform side rail using the bushings bolted on holes 5, 15, 20, 21, 32, 33, 34, 35, and 37.
8. Install a clevis on bushing 17 in an inverted position. Install a bushing on clevis 17A in the normal position. Bolt an additional clevis to each of the clevises bolted to the 17th bushings.
9. Starting at the front of the platform, number the clevises bolted to the right side of the platform from 1 through 16, and those bolted to the left side from 1A through 16A. Number the clevises installed on the 17th bushings 5 and 5A. Number the clevises bolted to these clevises 4 and 4A.
10. Label the tie-down rings according to FM 4-20.102/TO 13C7-1-5.

Figure 3-8. Platform Prepared

PREPARING AND POSITIONING HONEYCOMB STACKS

3-18. Prepare honeycomb stacks 1 through 3 as shown in Figures 2-3 and 2-4. Glue two 36- by 60-inch pieces of honeycomb flush together to make stack 4. Position the stacks on the platform as shown in Figure 3-9, and according to FM 4-20.102/TO 13C7-1-5.

Notes: 1. This drawing is not drawn to scale.
2. All dimensions are in inches.

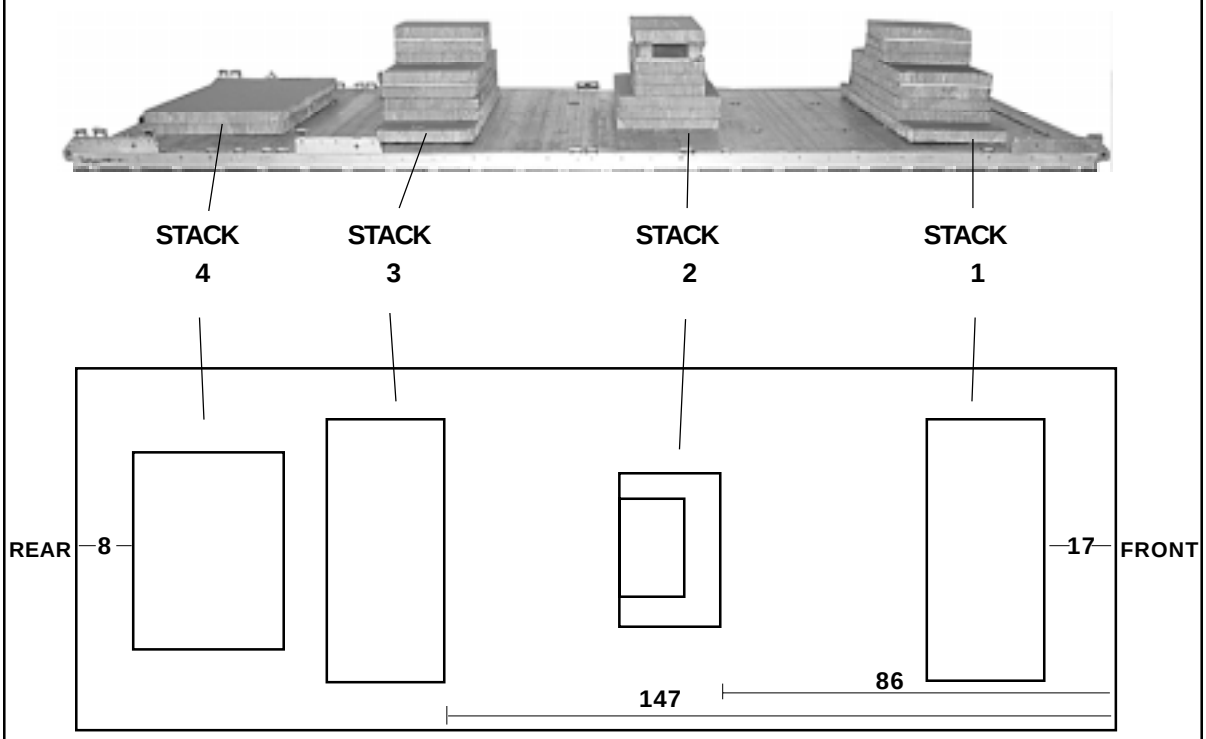

Stack Number	Position of Stack on Platform
	Place stack:
1	17 inches from the front edge of the platform and centered.
2	86 inches from the front edge of the platform and centered. Face the cutout to the rear.
3	147 inches from the front edge of the platform and centered.
4	8 inches from the rear edge of the platform and centered.

Figure 3-9. Honeycomb Stacks Positioned on Platform

RIGGING ACCOMPANYING LOADS ON THE PLATFORM AND IN THE TRUCK

3-19. The accompanying load shown is fourteen boxes of 20-millimeter ammunition. Any load of similar weight and configuration can be rigged on the platform. Rig this accompanying load on the platform as shown in Figure 3-10.

CAUTION
Only ammunition listed in FM 10-500-53/MCRP 4-3.81/ TO 13C7-18-41 may be airdropped. Package, mark and label hazardous material according to AFJMAN 24-204/TM 38-250.

Rig an accompanying load in the truck as shown in Section I of this chapter. Chapter 5 shows specific accompanying loads. Make sure any accompanying loads meet the restrictions and requirements as outlined in FM 4-20.102/TO 13C7-1-5.

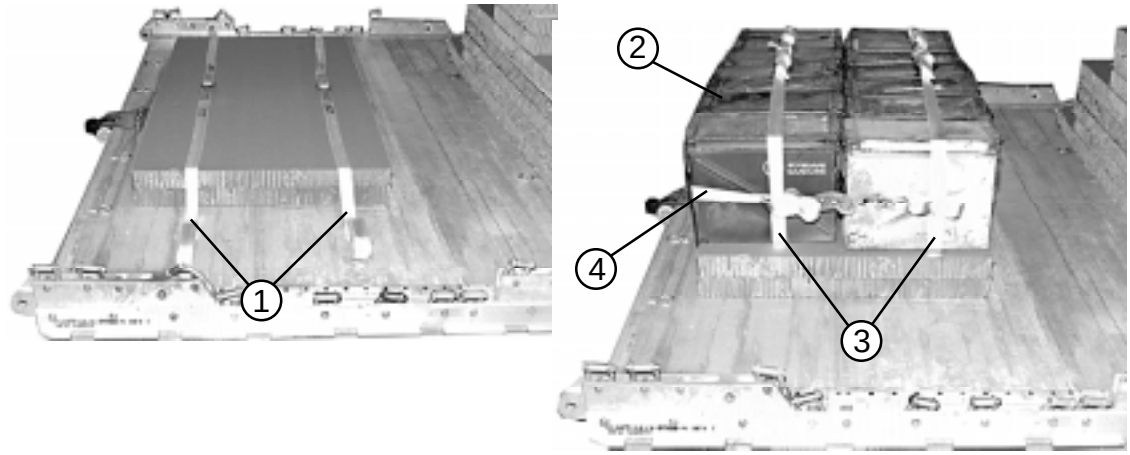

1. Form two 30-foot lashings according to FM 4-20.102/TO 13C7-1-5. Lay them from side to side on the honeycomb as shown.
2. Set 14 boxes of 20-millimeter ammunition on top of the lashings and honeycomb.
3. Secure the 30-foot lashings placed in step 1 on top of the boxes with D-rings and load binders.
4. Run a 30-foot lashing around the boxes, passing it through the box carrying handles. Secure the lashing with D-rings and a load binder on the side.

Figure 3-10. Accompanying Load Stowed on Platform

1. This drawing is not drawn to scale.
2. All dimensions are in inches.

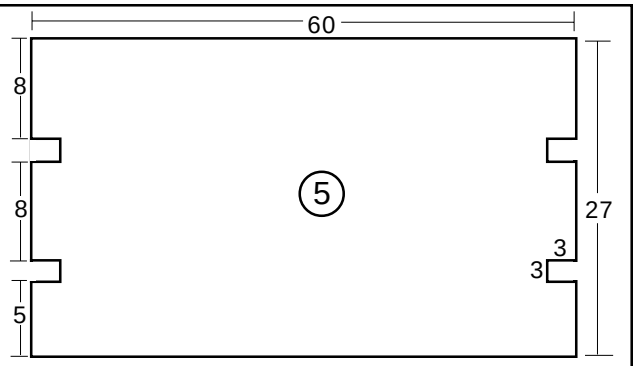

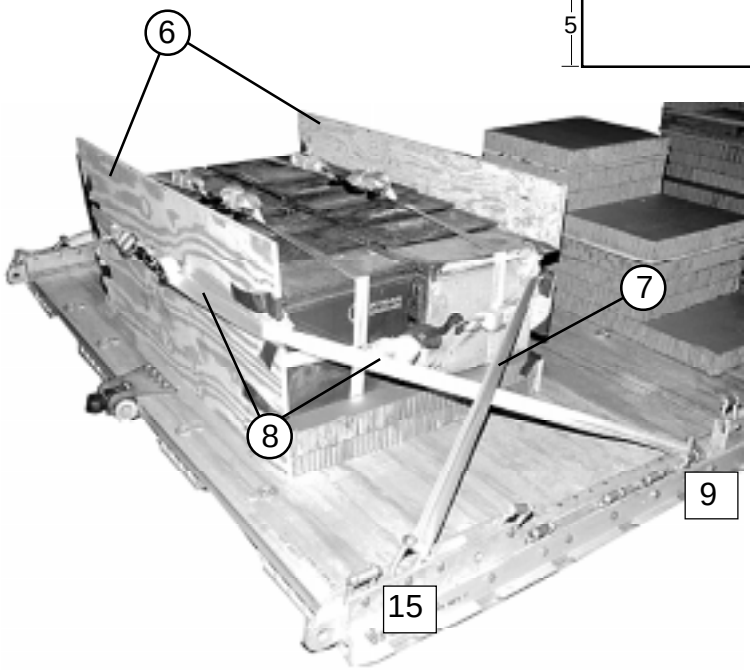

(5) Construct two endboards of 3/4- by 27- by 60-inch plywood as shown.

(6) Center an endboard against each end of the stack. Pad the cutouts with cellulose wadding taped in place.

(7) Center a 30-foot lashing on the front endboard and pass the ends through the upper slots. Pass the lashing through clevises 15 and 15A and bring the ends back through the upper slots in the front endboard. Secure the lashing against the front endboard with two D-rings and a load binder.

(8) Center a 30-foot lashing on the rear endboard and pass the ends through the upper slots. Pass the lashing through clevises 9 and 9A and bring the ends back through the upper slots in the rear endboard. Secure the lashing against the rear endboard with two D-rings and a load binder.

Figure 3-10. Accompanying Load Stowed on Platform (continued)

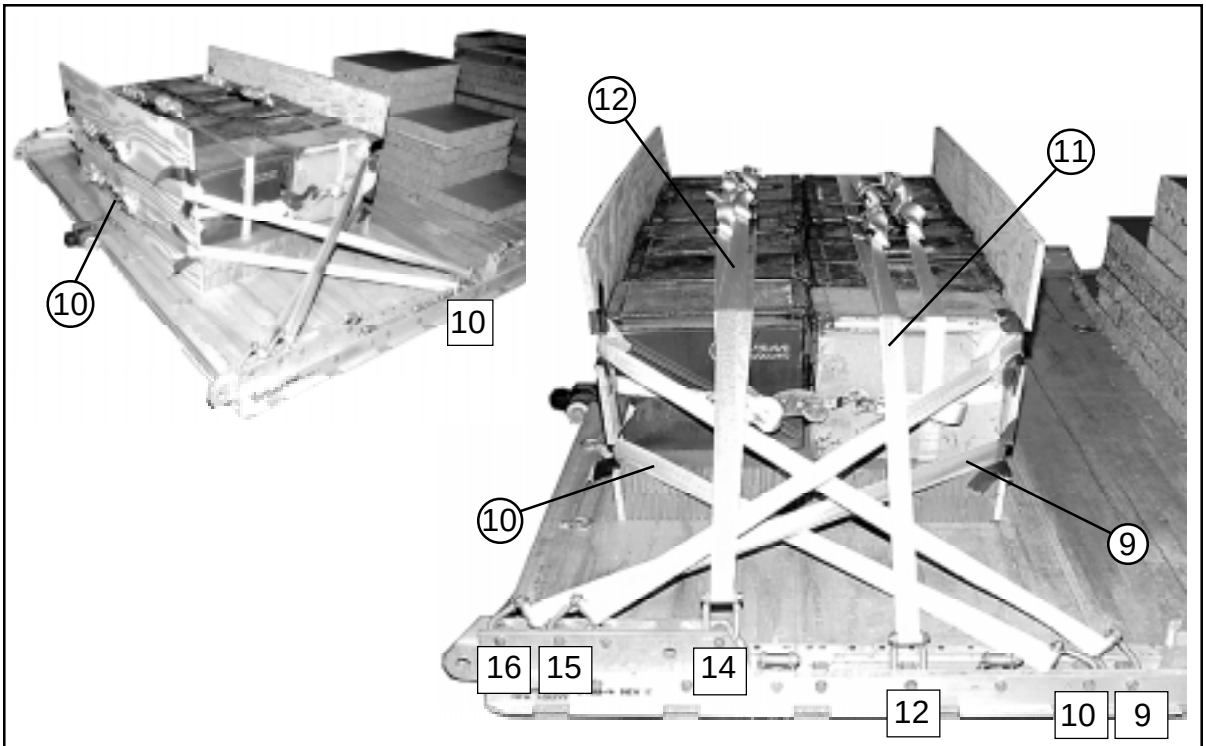

(9) Center a 30-foot lashing on the front endboard and pass the ends through the lower slots. Pass the lashing through clevises 16 and 16A and bring the ends back through the lower slots in the front endboard. Secure the lashing against the front endboard with two D-rings and a load binder.

(10) Center a 30-foot lashing on the rear endboard and pass the ends through the lower slots. Pass the lashing through clevises10 and 10A and bring the ends back through the lower slots in the rear endboard. Secure the lashing against the rear endboard with two D-rings and a load binder.

(11) Center a 30-foot lashing on top of the boxes. Pass the ends of the lashing through clevises 12 and 12A, and back over to the tops of the boxes. Secure the lashing with two D-rings and a load binder.

(12) Center a 30-foot lashing on top of the boxes. Pass the ends of the lashing through clevises 14 and 14A, and back over to the tops of the boxes. Secure the lashing with two D-rings and a load binder.

Figure 3-10. Accompanying Load Stowed on Platform (continued)

PREPARING TRUCK

3-20. Prepare the truck as described in paragraphs 2-4a through e, g, and h, and as shown in Figures 2-6 and 2-7, 2-8 (omit steps 1 and 3), 2-9, 2-11, and 2-12. Further prepare the closed-body HMMWV as shown in Figures 3-2 and 3-3 (omit step 3).

INSTALLING OPTIONAL DRIVE-OFF AIDS ON PLATFORM

3-21. Install the optional drive-off aids on the platform as shown in Figure 3-11.

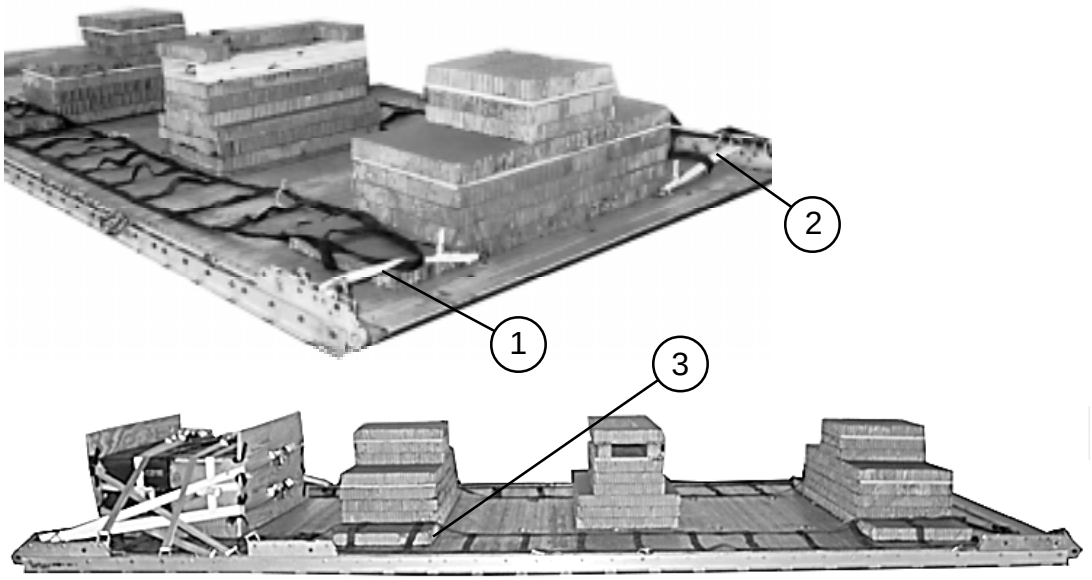

1. Pass a 45-inch length of type V or 1-inch tubular nylon webbing through tie-down ring A1, through the end loop of a drive-off aid, and around the second bushing of the right tandem link. Knot the webbing according to FM 4-20.102/TO 13C7-1-5.

2. Repeat step 1 for the left side, using tie-down ring B1 and the second bushing of the left tandem link.

3. Extend the drive-off aids to the rear, over stacks 1 and 3. Secure the drive-off aids to bushings and clevises with type I, 1/4-inch cotton webbing.

Figure 3-11. Drive-off Aids Installed on Platform

LIFTING AND POSITIONING TRUCK AND INSTALLING OPTIONAL DRIVE-OFF AIDS

3-22. Install lifting slings on the truck as shown in Figure 2-16. Position the truck on the platform as shown in Figure 3-12. Adapt the procedures in Figure 2-17 to install the drive-off aids to the front wheels of the truck.

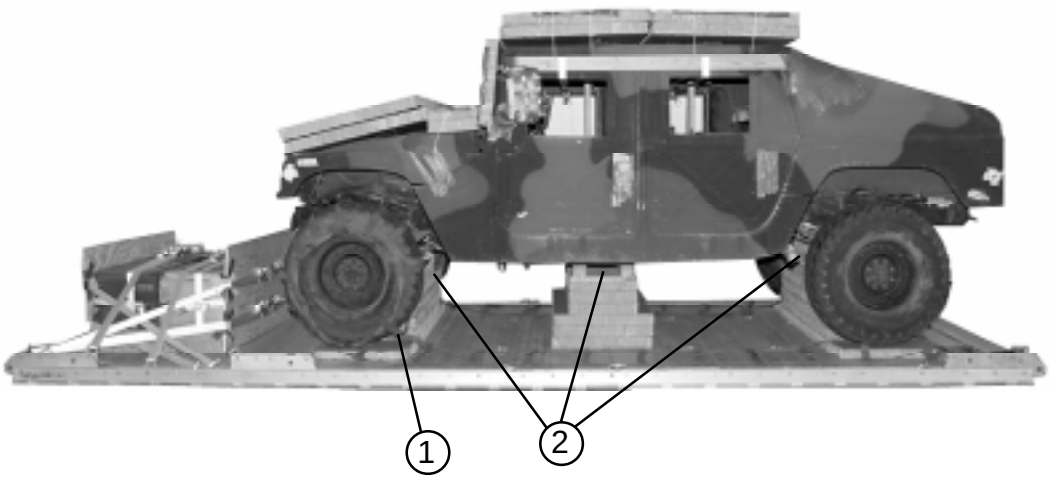

1. Lift the truck onto the honeycomb stacks so that the rear of the truck is aligned with the front edge of the platform. Wrap the drive-off aids around the front wheels before setting the truck down on the honeycomb stacks.

2. Be sure that the suspension cross members rest securely on stacks 1and 3. Be sure that the frame cross member rests securely on the 6-inch part of the honeycomb at the top of stack 2.

Figure 3- 12. Truck Positioned on Platform

LASHING TRUCK

3-23. Lash the truck to the platform with fifteen15-foot tie-down assemblies. Install the lashings according to FM 4-20.102/TO 13C7-1-5, and as shown in Figures 3-13 and 3-14.

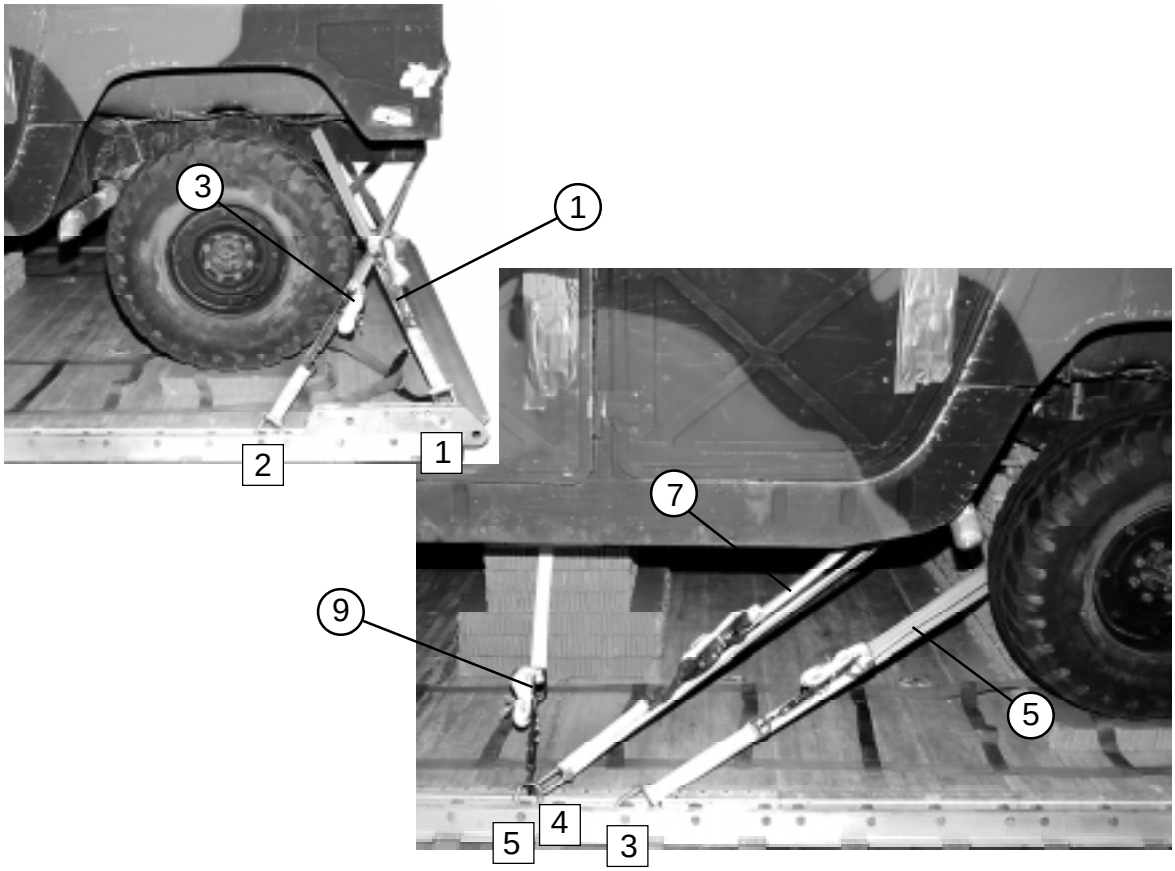

Lashing Number	**Tie-down** Clevis Number	**Instructions**
		Pass lashing:
1	1	Through tie-down bracket behind left rear coil spring.
2	1A	Through tie-down bracket behind right rear coil spring.
3	2	Through left rear lifting shackle.
4	2A	Through right rear lifting shackle.
5	3	Around left rear lower control arm.
6	3A	Around right rear lower control arm.
7	4	Through tie-down bracket in front of left rear coil spring.
8	4A	Through tie-down bracket in front of right rear coil spring.
9	5 and 5A	Pass a 15-foot lashing through clevis 5A and through its own D-ring. Pass the lashing through the hole in stack 2. Attach the lashing to clevis 5 with a load binder.

Figure 3-13. Lashings 1 Through 9 Installed

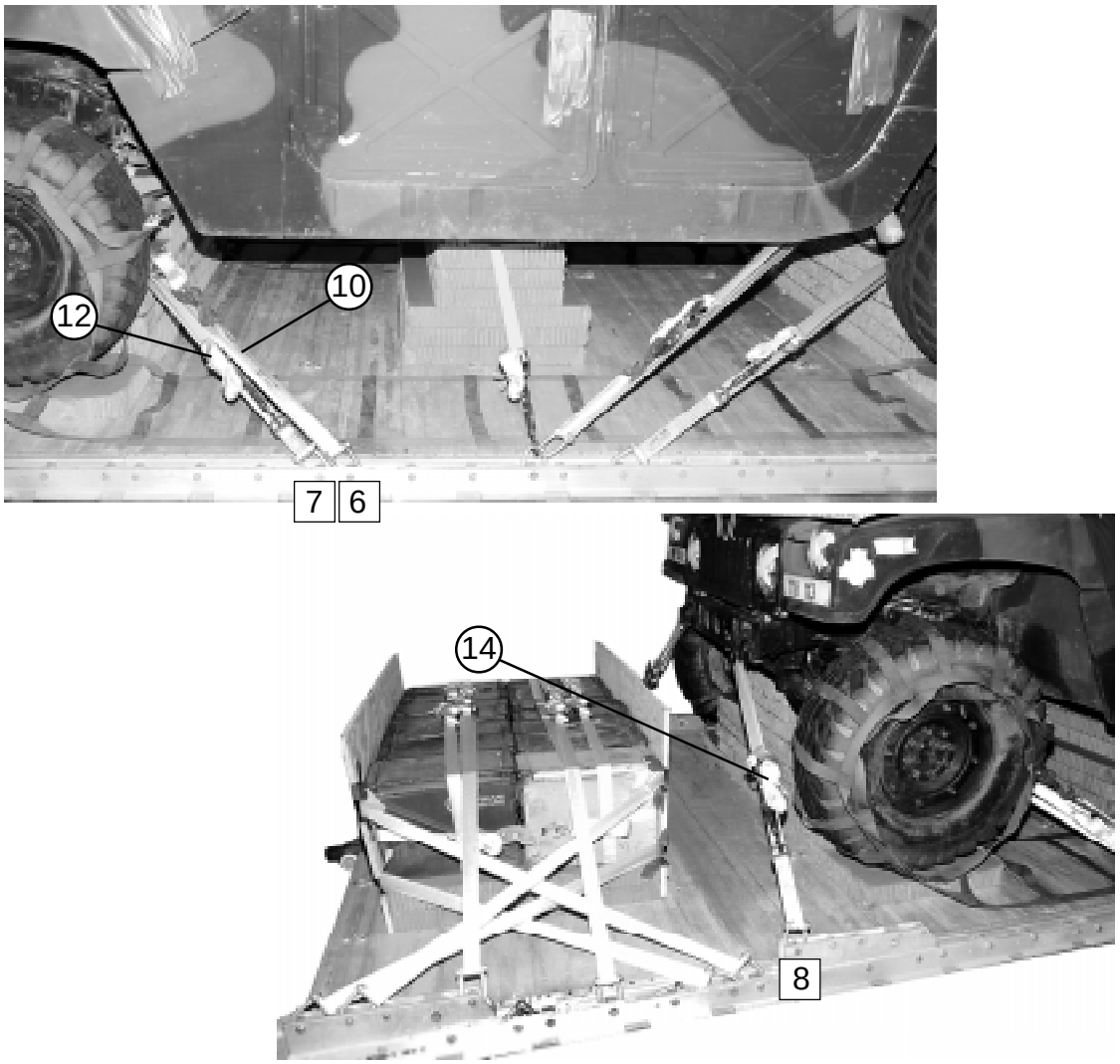

Lashing Number	**Tie-down** Clevis Number	**Instructions**
		Pass lashing:
10	6	Through tie-down bracket behind left front coil spring.
11	6A	Through tie-down bracket behind right front coil spring.
12	7	Around left lower control arm.
13	7A	Around right lower control arm.
14	8	Through tie-down bracket on end of left frame rail.
15	8A	Through tie-down bracket on end of right frame rail.

Figure 3-14. Lashings 10 Through 15 Installed

INSTALLING AND SAFETY TYING SUSPENSION SLINGS

3-24. Install, pad and safety tie the suspension slings according to FM 4-20.102/ TO 13C7-1-5, and as shown in Figure 3-15.

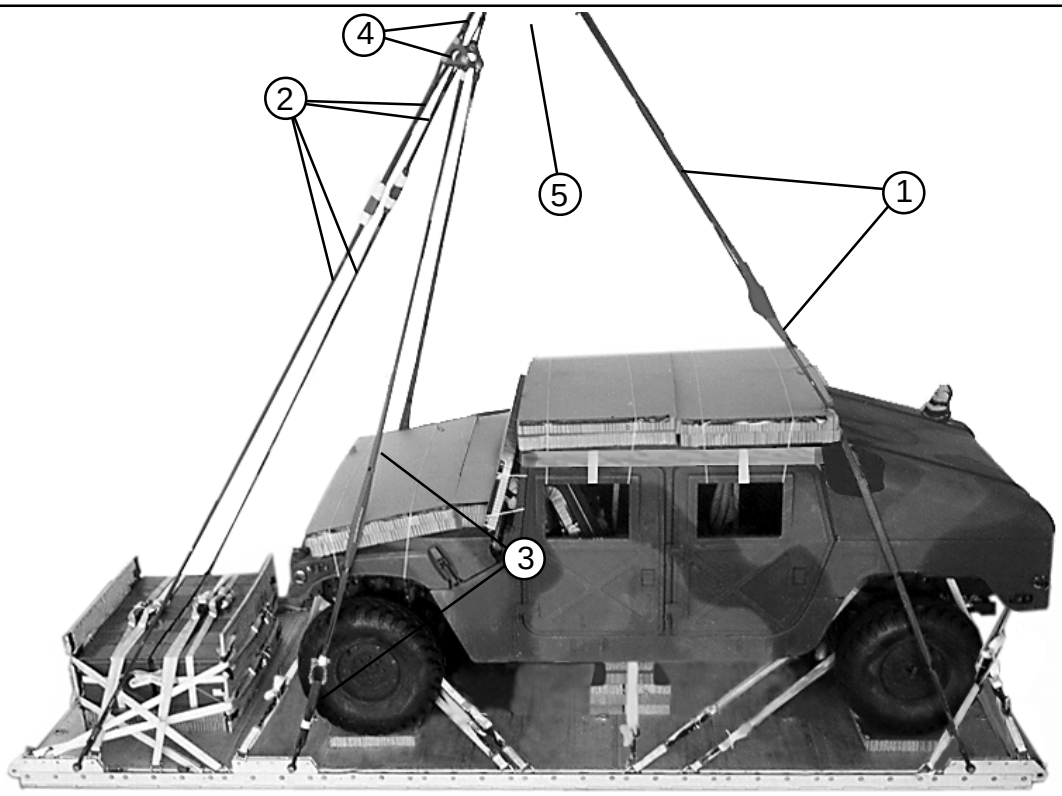

1. Attach a 9-foot (2-loop), type XXVI nylon sling to each front tandem link with a large clevis. Join a second 9-foot (2-loop) type XXVI nylon sling to each front suspension sling with a 3 3/4-inch two-point link. Pad the link with felt taped in place.

2. Attach a 12-foot (2-loop), type XXVI nylon sling to each rear tandem link with a large clevis. Join a 3-foot, (2-loop), Type XXVI nylon sling to the 12-foot sling with a 3 3/4-inch two point link. Pad the link with felt taped in place.

3. Place both ends of a 3-foot (2-loop), type XXVI nylon sling in the bell of a large clevis. Bolt the clevis to the suspension link. Join a 12-foot (2-loop), type XXVI nylon sling to the 3-foot sling with a large clevis, placing the bell of the clevis in the 3-foot sling. Repeat for the left side.

4. Join the center and rear suspension slings together at their free ends with a three-point link. Attach a 3-foot (2-loop), Type XXVI nylon sling to the remaining point of the 3-point link on each side.

5. Attach the front, center, and rear suspension slings to the crane hook and pull the slings taut.

Figure 3-15. Suspension Slings Installed, Padded and Safety Tied

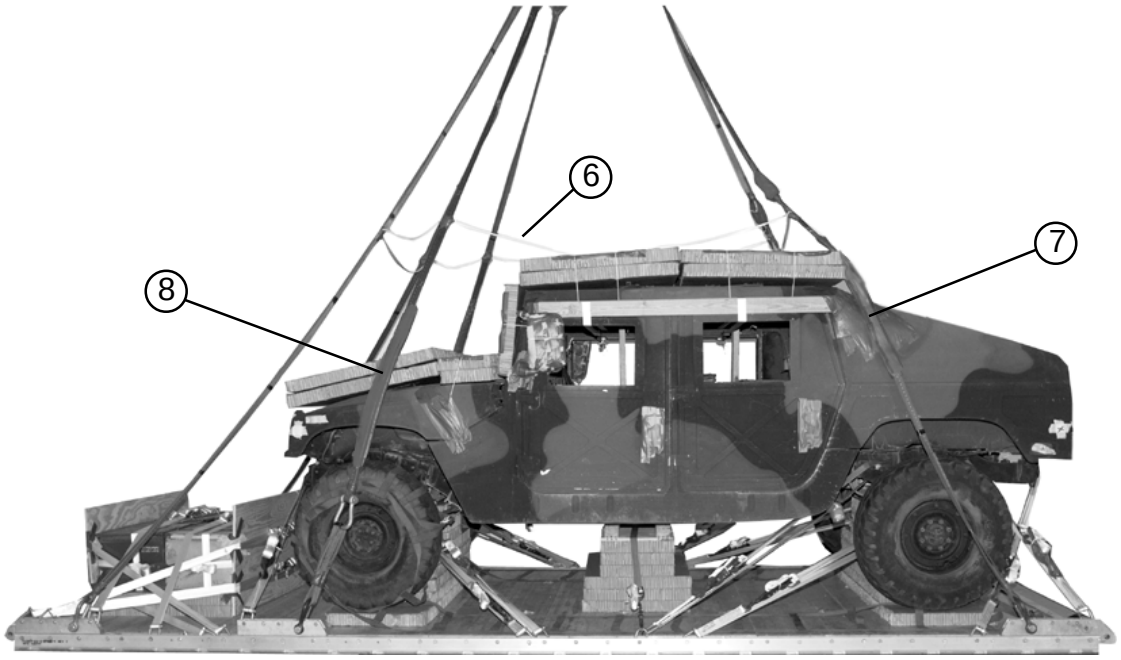

6 Safety tie the suspension slings with the deadman's tie according to FM 4-20.102/TO 13C7-1-5.

7 Wrap the front suspension slings with a layer of felt from 64 to 96 inches above the platform. Tape the felt in place. Extend the tape 3 inches beyond the ends of the felt.

8 Use the procedure given in step 7 above to pad the center suspension slings from 38 to 74 inches above the platform.

Figure 3-15. Suspension Slings Installed, Padded and Safety Tied (continued)

STOWING CARGO PARACHUTES

3-25. Use three G-11 cargo parachutes on this load. Stow the cargo parachutes according to FM 4-20.102/TO 13C7-1-5, and as shown in Figure 3-16.

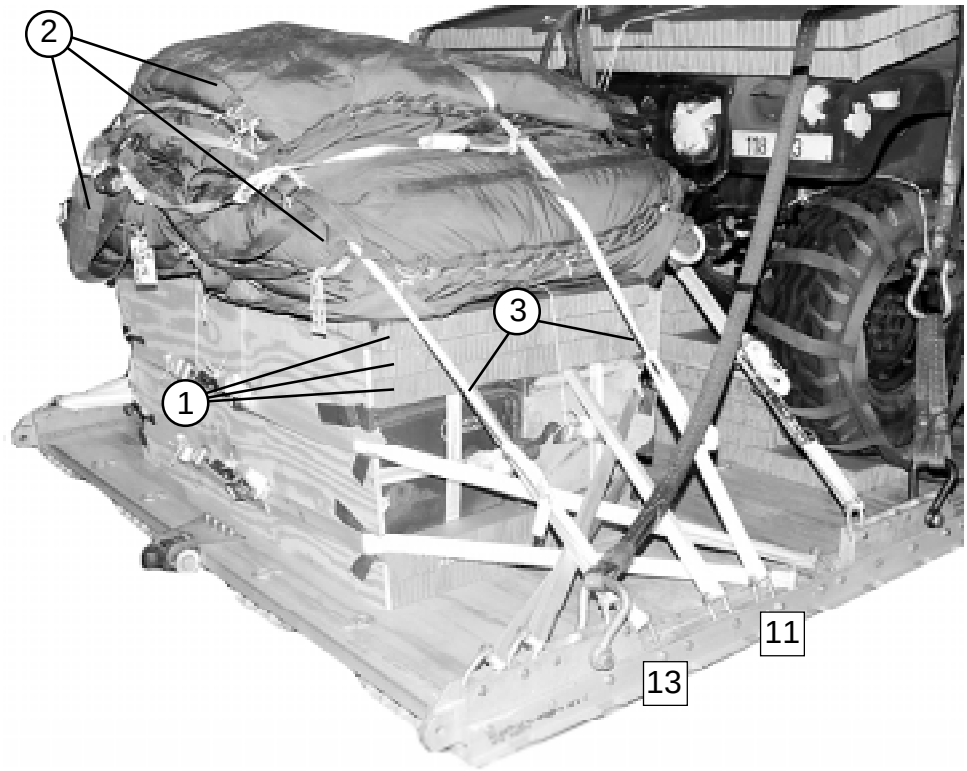

1. Secure three 30- by 60-inch pieces of honeycomb flush over the boxes with type III nylon cord.
2. Place and cluster three G-11 cargo parachutes on the honeycomb accordingto FM 4-20.102/TO 13C7-1-5.
3. Tie the restraint straps to clevises 11 and 11A, and to clevises 13 and 13A. Install the parachute release knives and straps according to FM 4-20.102/TO 13C7-1-5.

Figure 3-16. Cargo Parachutes Stowed

INSTALLING PARACHUTE RELEASE

3-26. Prepare and install an M-1 cargo parachute release according to FM 4-20.102/TO 13C7-1-5, and as shown in Figure 3-17.

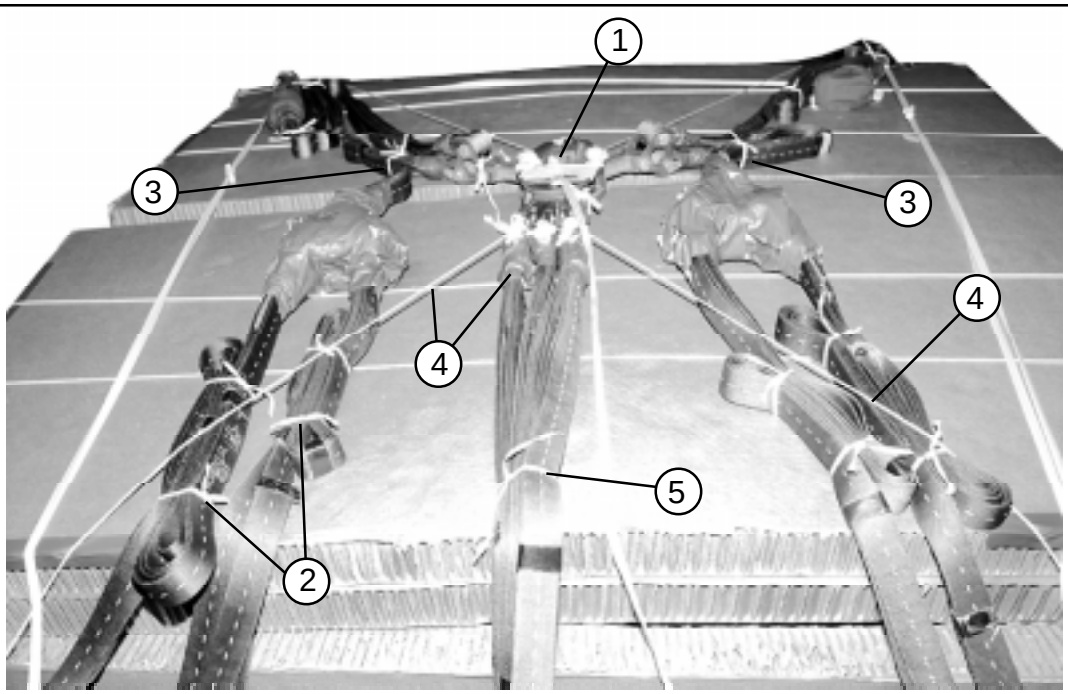

1. Center the M-1 release on the truck roof.
2. S-fold the slack in the rear and center suspension slings. Tie the folds with type III nylon cord.
3. S-fold the slack in the front suspension slings, and tie the folds with type I, 1/4-inch cotton webbing. Tie the front and rear suspension slings together with type I, 1/4-inch cotton webbing.
4. Attach the suspension slings and the riser extensions to the release. Tie the release to convenient points on the load with type III nylon cord tied over the suspension slings.
5. Tie the riser extensions together with type I, 1/4-inch cotton webbing.

Figure 3-17 . M-1 Cargo Parachute Release Installed

INSTALLING EXTRACTION SYSTEM

3-27. Install the EFTC extraction system according to FM 4-20.102/TO 13C7-1-5, and as shown in Figure 3-18.

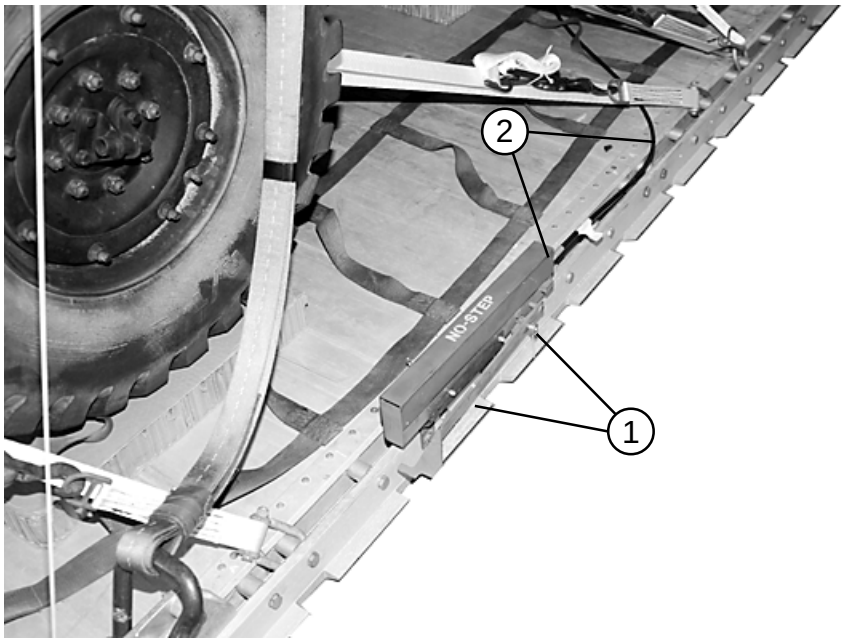

1 Install the EFTC mounting brackets in the rear mounting holes in the left platform side rail.

2 Attach a 20-foot release cable to the actuator. Install the actuator to the EFTC brackets.

Figure 3-18. EFTC Installed

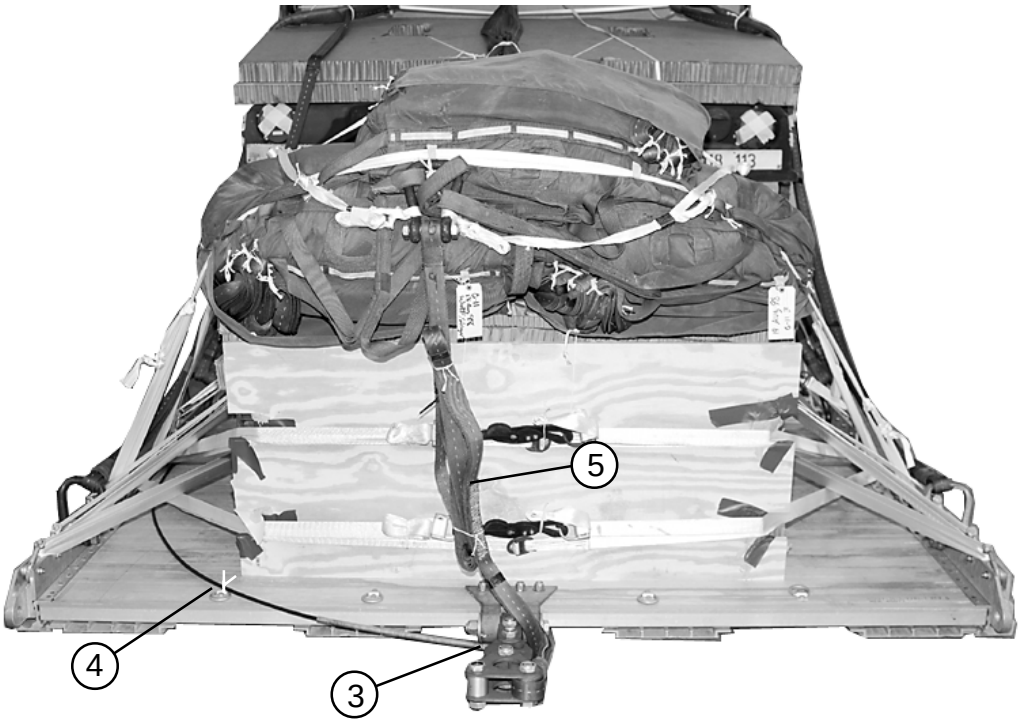

3 Install the latch assembly to the extraction bracket. Attach the release cable to the latch assembly.

4 Safety tie the release cable to bushings and tie-down rings with one turn of type I, 1/4-inch cotton webbing.

5 Install a 9-foot (2-loop), type XXVI nylon webbing deployment line on the load.

Figure 3-18. EFTC Installed (continued)

INSTALLING PROVISIONS FOR EMERGENCY RESTRAINTS

3-28. Install the provisions for emergency restraints on the load according to FM 4-20.102/TO 13C7-1-5.

PLACING EXTRACTION PARACHUTE

3-29. Select the extraction parachute and extraction line needed using the extraction line requirements table in FM 4-20.102/TO 13C7-1-5. Rig the extraction line in an extraction line bag according to TM 10-1670-286-20/TO 13C5-2-41. Place the extraction parachute and extraction line on the load for installation in the aircraft.

MARKING RIGGED LOAD

3-30. Mark the rigged load according to FM 4-20.102/TO 13C7-1-5, and as shown in Figure 3-19. Complete Shipper's Declaration for Dangerous Goods according to AFJMAN 24-204/TM 38-250. If the load varies from the one shown, the weight, height, CB, and parachute requirements must be recomputed.

EQUIPMENT REQUIRED

3-31. Use the equipment listed in Table 3-2 to rig this load. The equipment for rigging the accompanying load is NOT given in Table 3-2.

CAUTION
Make the final rigger inspection required by FM 4-20.102/ TO 13C7-1-5 before the load leaves the rigging site.

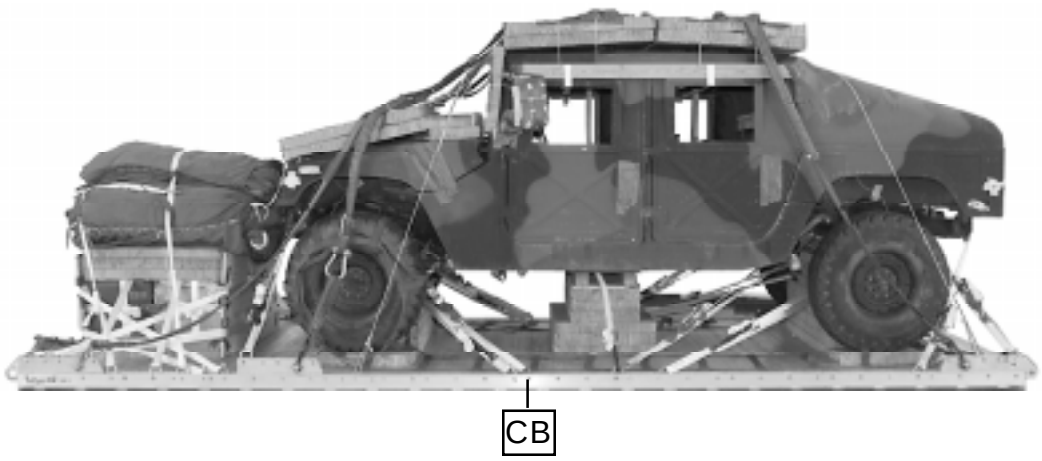

RIGGED LOAD DATA

Weight: Load shown ..... 11,740 pounds
Maximum load allowed ..... 12,100 pounds
Height ..... 91 inches
Width ..... 108 inches
Length (overall) ..... 265 inches
Overhang: Front ..... 0 inches
Rear (EFTC).....18 inches
CB (from front edge of platform) ..... 112 inches

Figure 3-19. M1025 Armament Carrier Rigged on a 20-Foot Platform

Table 3-2. Equipment Required for Rigging M1025 Armament Carrier with Accompanying Load on 20-Foot Platform

National Stock Number	Item	Quantity
8040-00-273-8713	Adhesive, paste, 1-gal	As required
4030-00-090-5354	Clevis, suspension, 1-in (large)	9
4020-00-240-2146	Cord, nylon, type III, 550-lb	As required
1670-00-434-5795	Coupling assembly, airdrop, extraction force transfer with cable, 20ft	1
	Cover:	
1670-00-360-0328	Clevis, large	1
8135-00-664-6958	Cushioning material, packaging, cellulose wadding	As required
8305-00-958-3685	Felt, 1/2-in thick	As required
1670-01-183-2678	Leaf, extraction line (line bag)	2
	Line, drogue (for C-17)	
1670-01-062-6313	60-ft (3-loop), type XXVI	1
	Line, extraction:	
1670-01-062-6313	For C-130: 60-ft (3-loop), type XXVI	1
1670-01-107-7651	For C-141: 140-ft (3-loop), type XXVI	1
	For C-5:	
1670-01-062-6313	60-ft, (3-loop), type XXVI and	1
1670-01-107-7651	140-ft (3-loop), type XXVI	1
	For C-17:	
1670-01-107-7651	140-ft (3-loop), type XXVI	1
	Link Assembly:	
	Two-point:	6
5306-00-435-8994	Bolt, 1-in diam, 4-in long	(12)
5310-00-232-5165	Nut, 1-in, hexagonal	(12)
1670-00-003-1953	Plate, side, 3 3/4-in	(12)
5365-00-007-3414	Spacer, large	(12)
	Lumber:	
5510-00-220-6146	2- by 4-in	As required
5510-00-220-6448	2- by 6-in	As required
5510-00-220-6274	4- by 4-in	As required
5315-00-010-4659	Nail, steel wire, 8d	As required

Table 3-2. Equipment Required for Rigging M1025 Armament Carrier with Accompanying Load on 20-Foot Platform (continued)

National Stock Number	Item	Quantity
1670-00-753-3928	Pad, energy-dissipating (honeycomb)	
	3- by 36- by 96-in	15 sheets
	Parachute:	
	Cargo:	
1670-01-016-7841	G-11B	3
	Cargo extraction:	
1670-01-063-3716	22-ft (for C-17, use H-block with this parachute.)	1
1670-01-063-3715	Drogue (for C-17) 15-ft	1
	Platform, airdrop, type V, 20-ft	
1670-01-353-8425	Bracket assembly, EFTC	(1)
1670-01-162-2372	Clevis assembly, type V	(46)
1670-01-162-2376	Bracket assembly, extraction	(1)
1670-01-247-2389	Link, suspension bracket, type V	(2)
1670-01-162-2381	Tandem link assembly (Multipurpose link)	(4)
5530-00-128-4981	Plywood, 3/4-in	5 sheets
1670-01-097-8816	Release, cargo parachute, M-1	1
	Sling, cargo, airdrop	
	For suspension:	
1670-01-062-6301	3-ft (2-loop), type XXVI nylon webbing	6
1670-01-062-6304	9-ft (2-loop), type XXVI nylon webbing	4
1670-01-062-6303	12-ft (2-loop), type XXVI nylon webbing	4
	For lifting:	
1670-01-062-6304	9-ft (2-loop), type XXVI nylon webbing	2
1670-01-062-6303	12-ft (2-loop), type XXVI nylon webbing	2
	For deployment:	
1670-01-062-6304	9-ft (2-loop), type XXVI nylon webbing	1
	For riser extension:	
1670-01-062-6302	20-ft (2-loop), type XXVI nylon webbing	6
5340-00-040-8219	Strap, parachute release, multi-cut, comes w/ 3 knives	2
7510-00-266-5016	Tape, adhesive, 2-in	As required
1670-00-937-0271	Tie-down assembly, 15-foot	39
1670-01-344-0825	Vehicle drive-off aid	2
	Webbing:	
8305-00-268-2411	Cotton, 1/4-in, type I	As required
8305-00-082-5752	Nylon, tubular, 1/2-in	As required
No NSN	Type V	As required
8305-00-263-3591	Type VIII	As required

SECTION III - RIGGING STRIKER IN ARMAMENT CARRIER-CONFIGURED M1025 HMMWV-SERIES TRUCK ON A 16-FOOT PLATFORM

DESCRIPTION OF LOAD

3-32. The unrigged M1025A2 armament carrier is described in Chapter 1. The Striker vehicle is configured as a field artillery observer carrier. The Striker serves fire direction control, self-location, target designation and night observation functions. The Striker components are contained within the truck. This load requires three G-11 cargo parachutes. Striker-equipped trucks using the M1025 and M1025A1 models are rigged using these procedures.

PREPARING PLATFORM

3-33. Prepare a 16-foot, type V airdrop platform according to TM 10-1670-268-20&P/TO 13C7-52-22. Install four tandem links, two suspension links and 20 load tie-down clevises as shown in Figure 3-20.

Notes: 1. The nose bumper may or may not be installed.
2. Measurements given in this chapter are from the front edge of the platform, NOT from the front edge of the nose bumper.

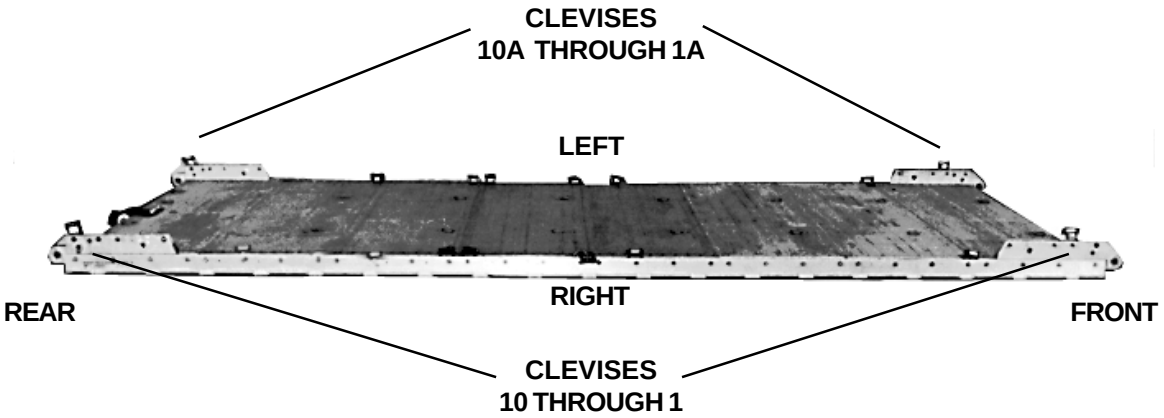

Step:

1. Install a tandem link on the front of each platform side rail using holes 1, 2, and 3.
2. Install a tandem link on the rear of each platform side rail using holes 30, 31, and 32.
3. Install a clevis on bushing 2 of each front tandem link.
4. Install a clevis on bushing 4 of each rear tandem link.
5. Starting at the front of the platform, install clevises on each platform side rail using the bushings bolted on holes 5, 15, 20, 21,23, and 27.
6. Install a clevis on bushing 17 in an inverted position. Install a clevis on bushing 17A in the normal position. Bolt an additional clevis to each of the clevises on the 17th bushings.
7. Starting at the front of the platform, number the clevises bolted to the right side of the platform from 1 through 10, and those bolted to the left side from 1A through 10A. Number the clevises installed on the 17th bushings 5 and 5A. Number the clevises bolted to these clevises 4 and 4A.
8. Label the tie-down rings according to FM 4-20.102/TO 13C7-1-5.

Figure 3-20. Platform Prepared

PREPARING AND POSITIONING HONEYCOMB STACKS

3-34. Prepare three honeycomb stacks as shown in Figures 2-3 and 2-4. Position the stacks on the platform as shown in Figure 2-5, and according to FM 4-20.102/TO 13C7-1-5.

PREPARING TRUCK

3-35. Prepare the truck as described in paragraphs 2-4a through e, g, and h, and as shown in Figures 2-6 and 2-7, 2-8 (omit steps 1 and 3), 2-9, 2-11, and 2-12. Further prepare the closed-body HMMWV as shown in Figures 3-2 and 3-3, steps 1 through 6.

PREPARING STRIKER EQUIPMENT

3-36. Prepare the components of the Striker system as shown in Figures 3-21 through 3-26.

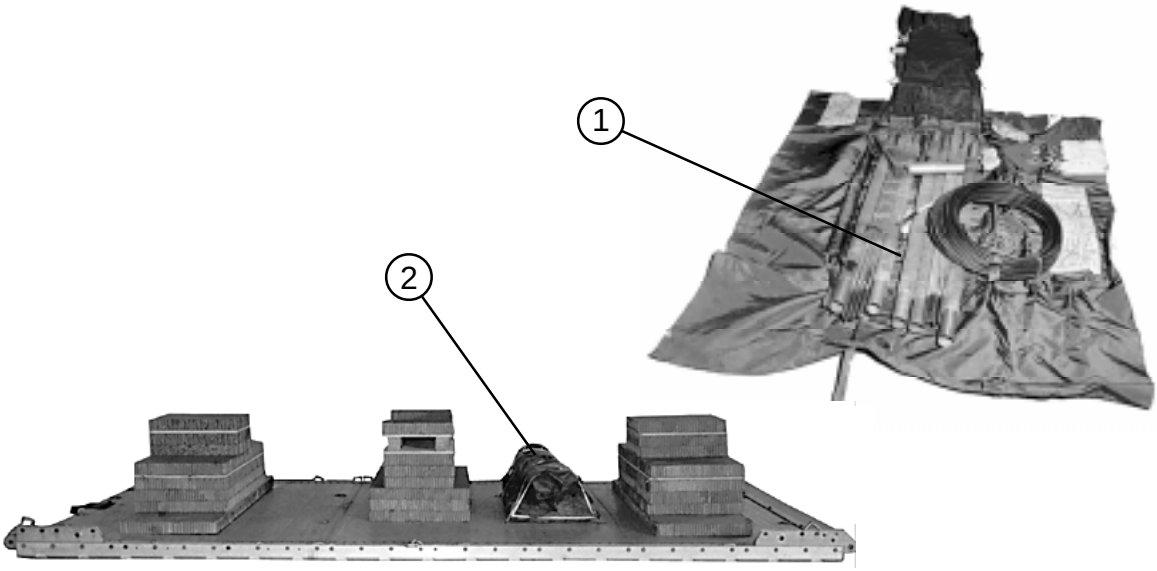

1 Roll the OE 254 antenna, its bag and wire into an elongated bundle.

2 Tie the roll to the third and fourth deck rings with 1/2-inch tubular nylon webbing in a figure-8 pattern.

Figure 3-21. Poles and Nets Rigged on Platform

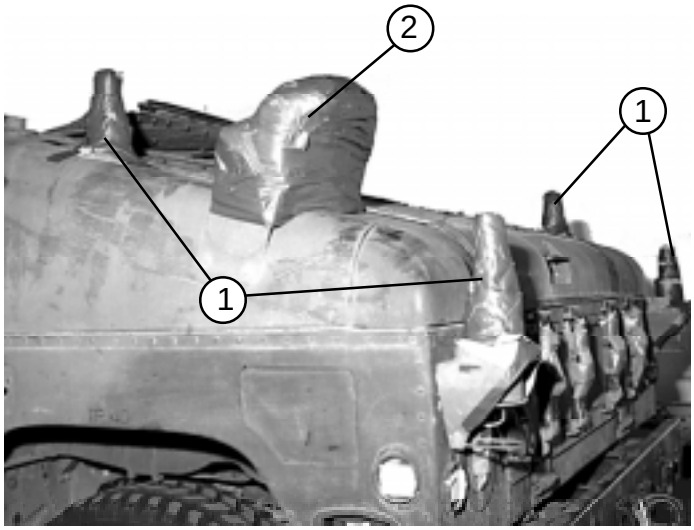

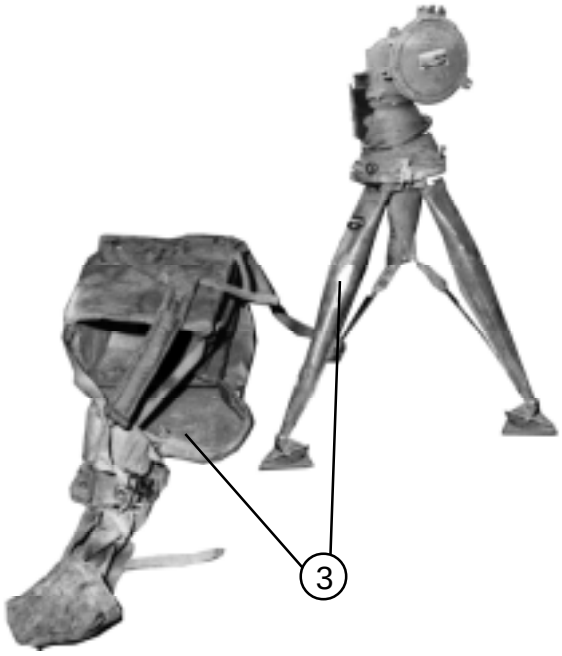

1. Pad all antenna mounts with cellulose wadding taped in place.
2. Pad the external fuel can mounts with cellulose wadding taped in place.
3. Fold the tripod and place it in its carrying case.

Figure 3-22. Antenna Mounts Padded and Tripod Prepared

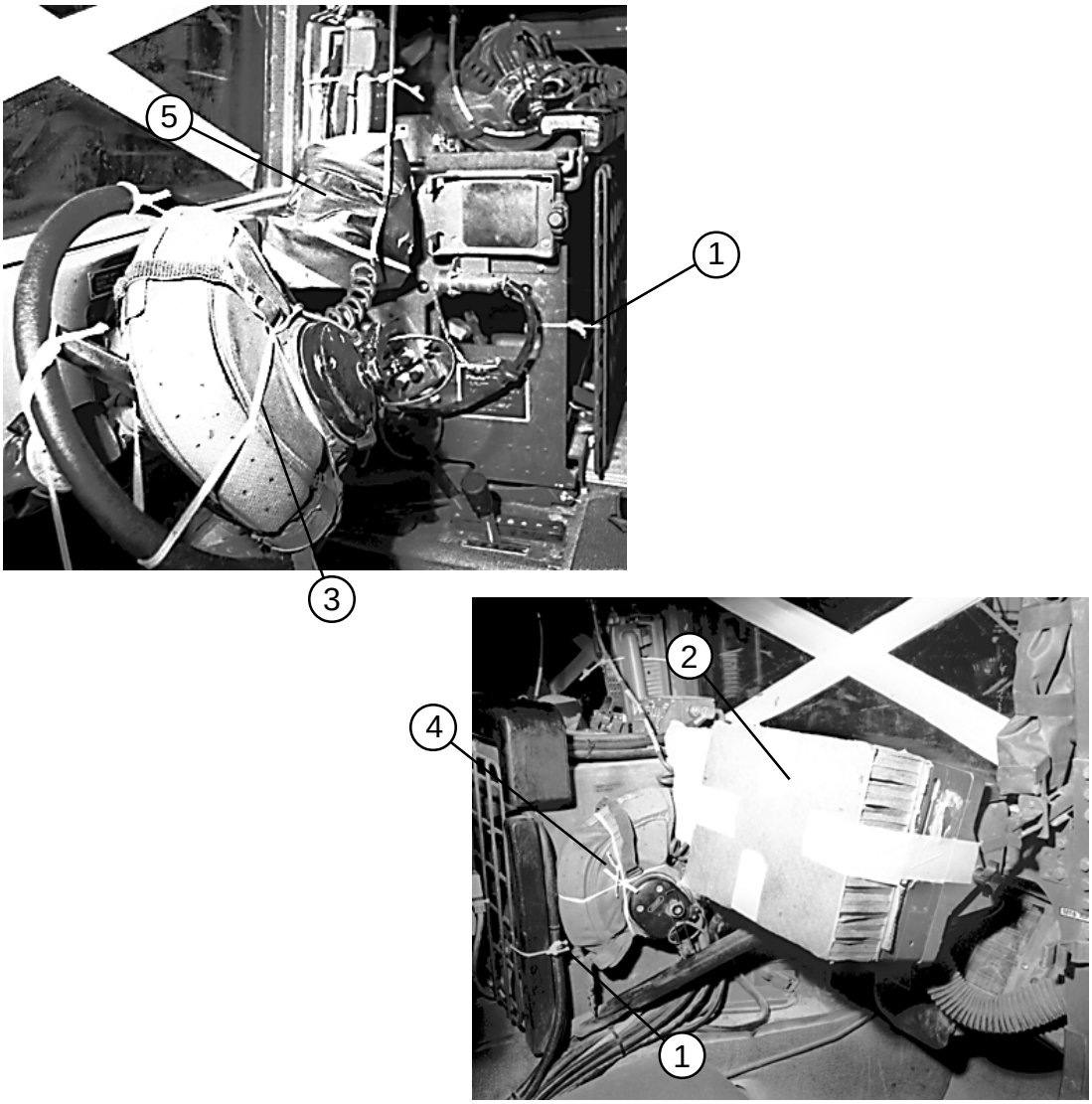

1. Tie the computer cage in place with type III nylon cord.
2. Pad the battlefield screen with cellulose wadding. Place a layer of honeycomb cut to fit over the cellulose wadding. Tape the honeycomb to the screen.
3. Tie the driver's headset to the steering wheel with type I, 1/4-inch cotton webbing.
4. Tie the passenger headset to the right side of the computer cage with type I, 1 1/4-inch cotton webbing.
5. Cover the range finder with cellulose wadding taped in place.

Figure 3-23. Cab Section of Truck Prepared

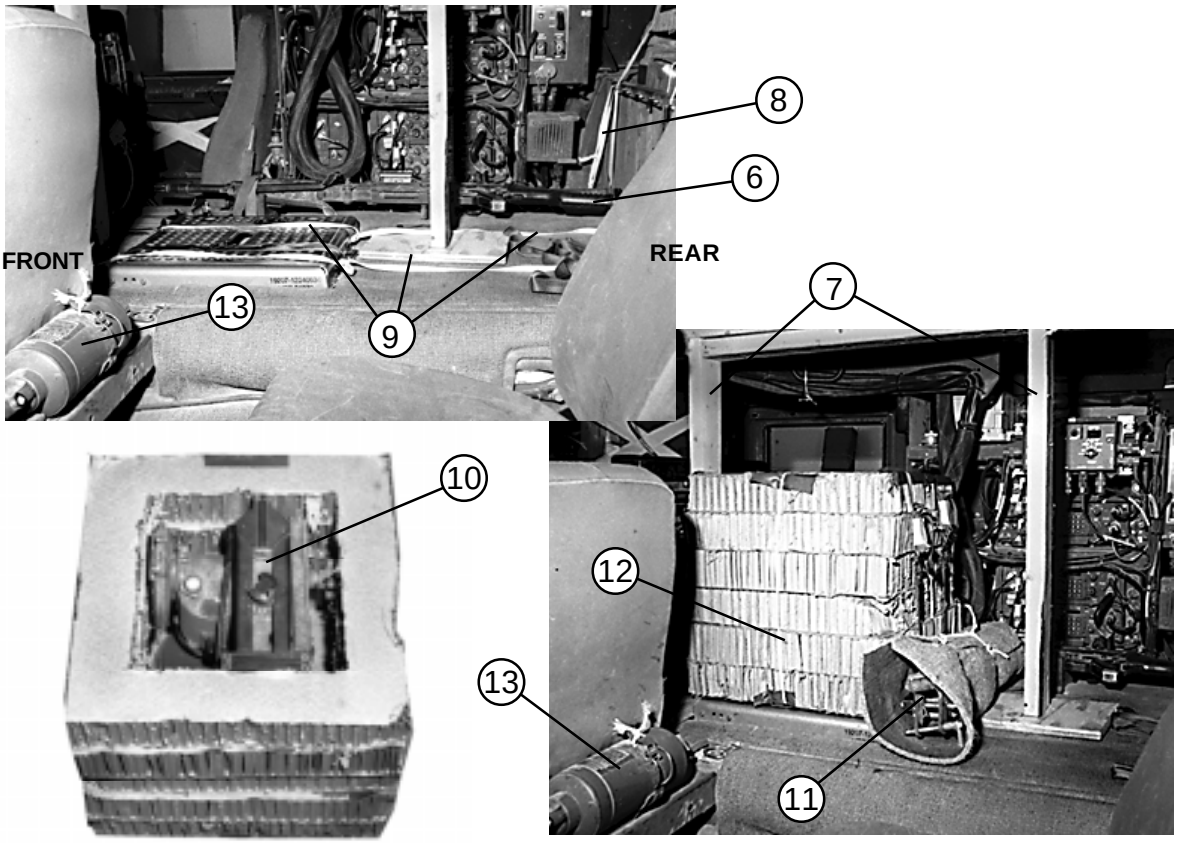

6 Tie the machine gun (optional) to convenient points in the truck.

7 Build and place the turret support as shown in Figure 3-2.

8 Tie the cargo area gate to the cargo bed rings with 1/2-inch tubular nylon webbing.

9 Route three lengths of 1/2-inch tubular nylon webbing through the rear cargo bed rings, under all straps and fixtures, under the front gate, and through the strap rings.

10 Center a 12- by 12-inch cutout in four 18- by 18-inch pieces of honeycomb. Glue one 18- by 18-inch piece to the stack as the box bottom. Pad the traversing unit with cellulose wadding, place it in the box, and tie an 18- by 18-inch piece of honeycomb on top with type III nylon cord.

11 Girth-hitch two lengths of 1/2-inch tubular nylon webbing through the strap brackets on the adjustable base. Wrap the machine gun mount with felt and tie it to the edge of the adjustable base with the 1/2-inch tubular nylon webbing.

12 Secure the traversing unit box made in step 10 to the adjustable base with the straps provided.

13 Tie the fire extinguisher and decontamination bottles to the seat braces with type III nylon cord.

Figure 3-23. Cab Section of Truck Prepared (continued)

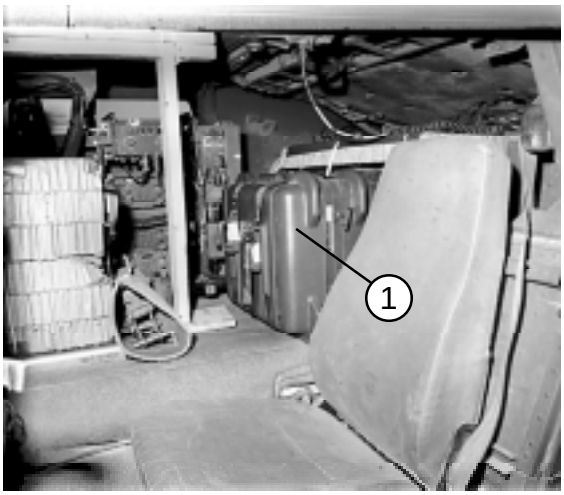

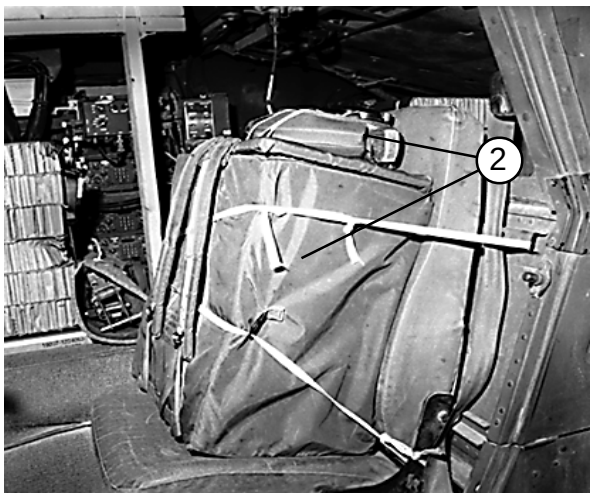

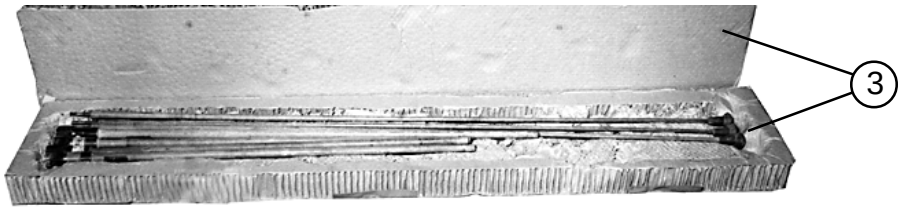

1. Place the disc drive case against the cargo area gate and secure it with the straps provided.
2. Secure the rangefinder to the rear seat with 1/2-inch tubular nylon webbing. Tie the rear headset to the rangefinder bag straps with type I, 1/4-inch cotton webbing.
3. Pack the vehicle antenna sections between two 12- by 71-inch pieces of honeycomb, making indentations for the antenna sections. Tie the box together with type III nylon cord.
4. Place an 18- by 18-inch piece of honeycomb over the traversing unit box.
5. Place the antenna box made in step 3 above between the turret and the piece of honeycomb placed in step 4 above. Secure the antenna box to the turret with type III nylon cord.

Figure 3-24. Equipment Cases Stowed in Seat Area of Truck

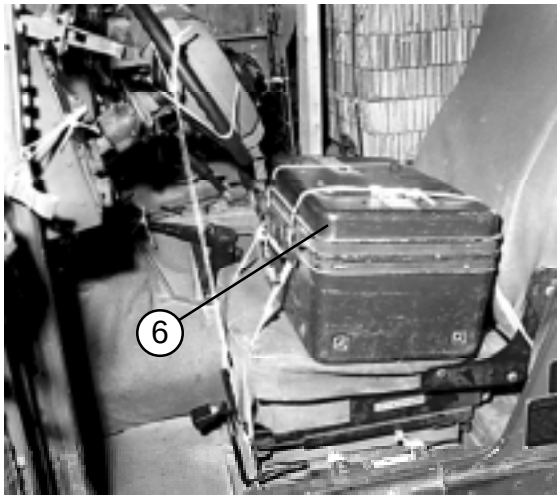

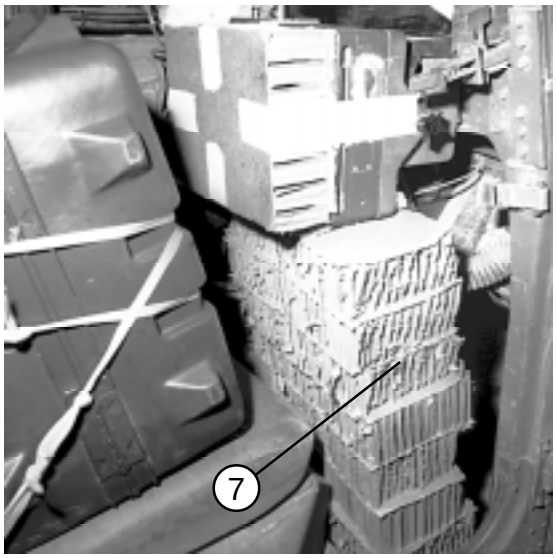

(6) Secure the night vision infrared sight box to the front seat frame with 1/2-inch tubular nylon webbing.

(7) Glue a 15-inch piece of 2- by 6-inch lumber to an eight-layer stack of 6- by 15-inch honeycomb. Place this stack with the lumber side down under the battlefield screen. Use the screen positioning controls to make a snug fit between the screen and the honeycomb.

(8) Secure the computer case to the passenger seat back and frame with 1/2-inch tubular nylon webbing.

Figure 3-24. Equipment Cases Stowed in Seat Area of Truck (continued)

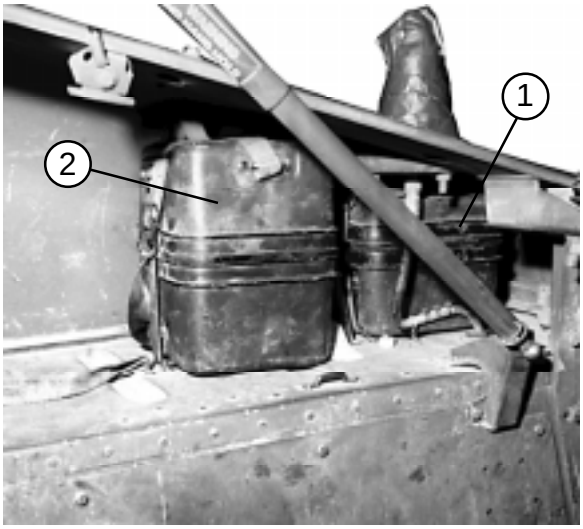

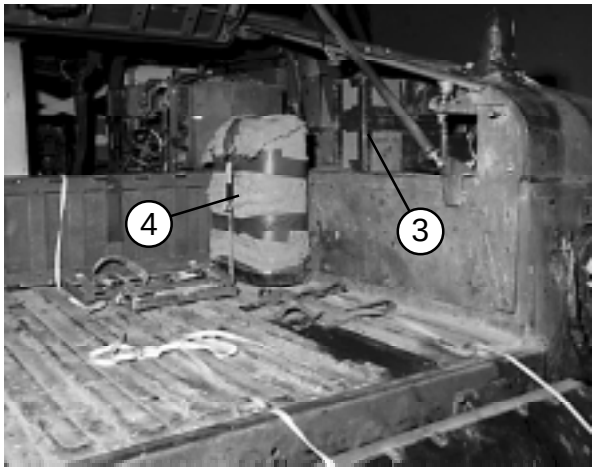

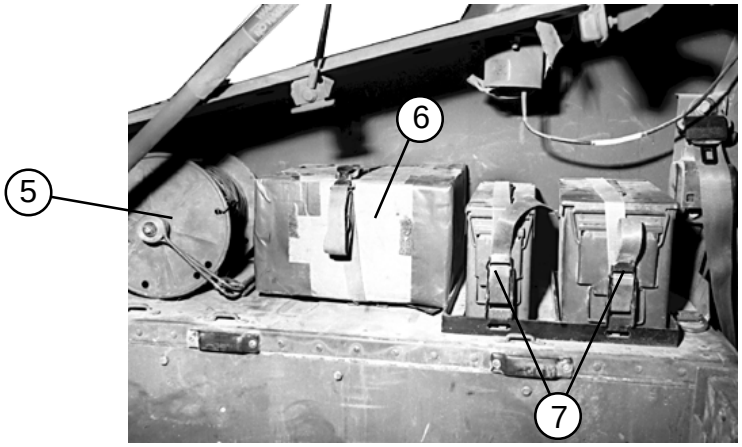

1. Secure the lithium batteries case in the right rear corner of the cargo area with the strap provided.
2. Secure the battery power conditioner in its case with the strap provided.
3. Pack the laser infrared observation sight in an appropriate box. Secure the sight box in front of the battery power conditioner with the straps provided.
4. Secure a padded fuel can in the mount with the strap provided.
5. Secure the wire spool in the left rear corner of the cargo bed with 1/2-inch tubular nylon webbing.
6. Secure a box of M8 chemical detector paper in front of the wire spool with the strap provided.
7. Secure the ammunition cans in front of the M8 paper with the straps provided.

Figure 3-25. Equipment Stowed in Cargo Area

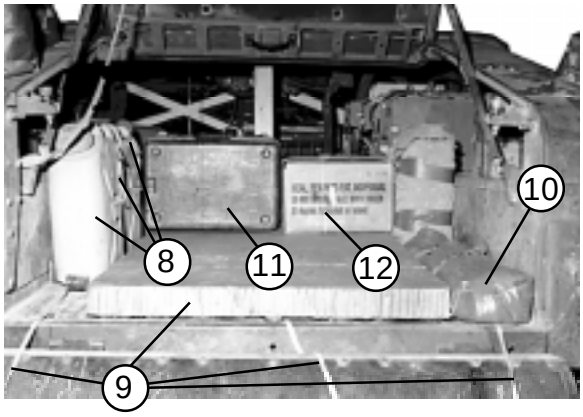

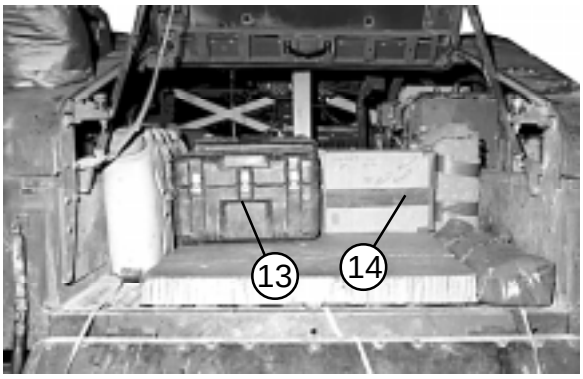

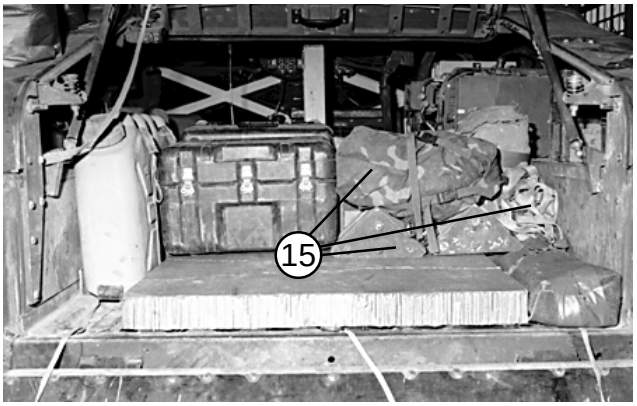

8 Secure three water cans in the mounts on the left with the straps provided.

9 Be sure the lengths of 1/2-inch tubular nylon webbing placed in Figure 3-23, step 9 are free of twists and lying flat. Cover the truck bed and the nylon webbing with a 44- by 36-inch piece of honeycomb.

10 Pad the M-240 tripod with felt taped in place. Position the tripod to the right of the honeycomb.

11 Place the collimator bore-sight case on the left front corner of the honeycomb.

12 Place a box of MRE's to the right of the collimator bore-sight case.

13 Place the ancillary equipment transit case to the rear of of the collimeter bore-sight case.

14 Place the night vision infrared sight in an appropriate box, pad it, and place the box to the rear of the MRE box.

15 Group the vehicle chock blocks, the bag of MOPP gear, and the cargo net between the wheel well and the ancillary equipment case.

Figure 3-25. Equipment Stowed in Cargo Area (continued)

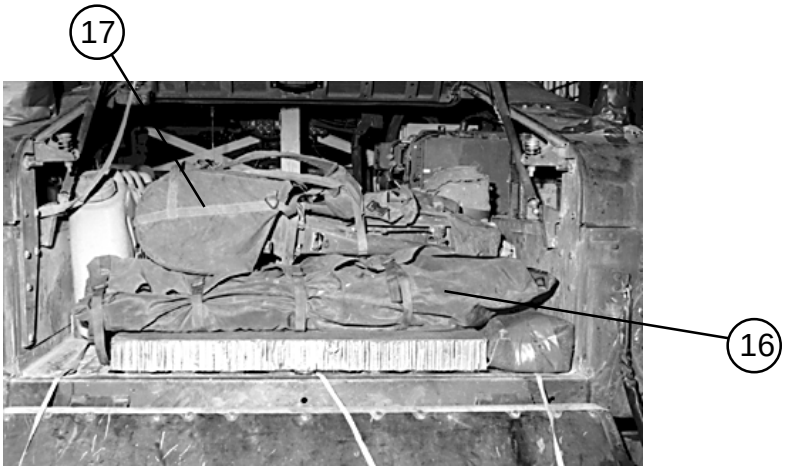

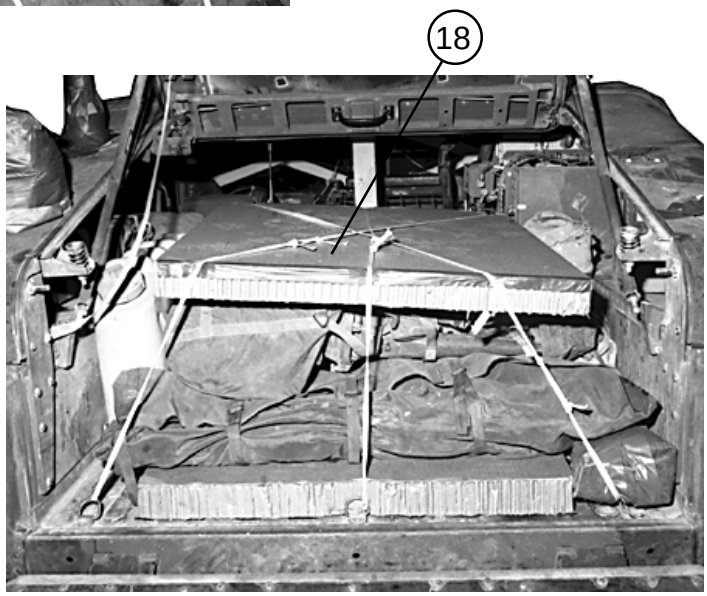

(16) Place the antenna group across the width of the cargo bed at the rear.

(17) Place the tripod in its case on top of the antenna case.

(18) Tape the upper edges of a 36- by 40-inch piece of honeycomb. Secure the ends of the pre-positioned 1/2-inch tubular nylon webbing, front to rear, left front to right rear, and right front to left rear.

(19) Close and secure the hatch as shown in Figure 3-4, step 11.

Figure 3-25. Equipment Stowed in Cargo Area (continued)

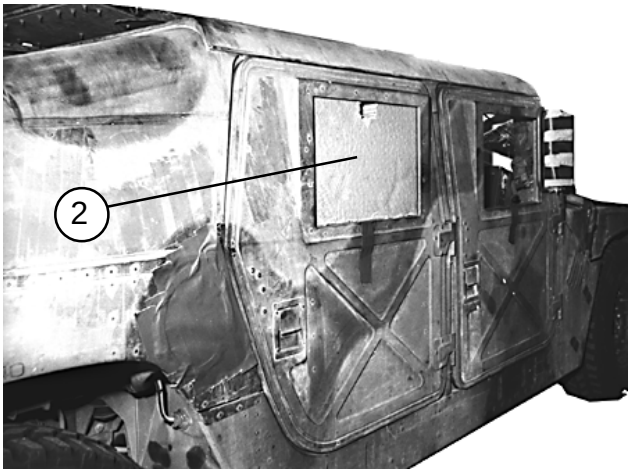

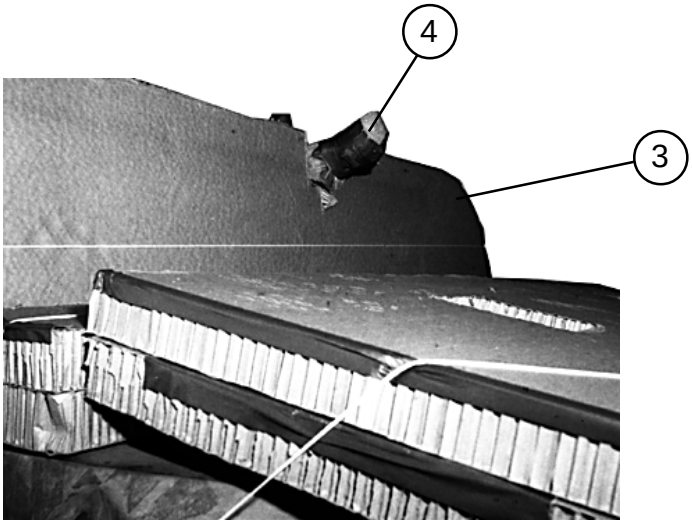

1. Tape the windows in an X pattern, and lower them. (not shown)
2. Center a 2- by 2-inch cutout in a long edge of a 21 1/2- by 14 1/2-inch piece of honeycomb. Place the honeycomb in the right rear window, facing the cutout up. Tape the honeycomb in place between the equipment mount and the door.
3. Cut a notch in the 21- by 83-inch piece of honeycomb covering the windshield to allow for the GPS (global positioning system) antenna and the windshield wipers. Round the upper edges of the windshield cover.
4. Pad the GPS antenna with cellulose wadding and tape.

Figure 3-26. Outside and Top of Striker Truck Prepared

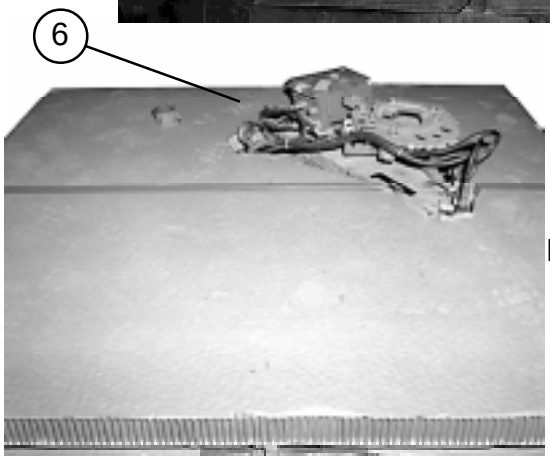

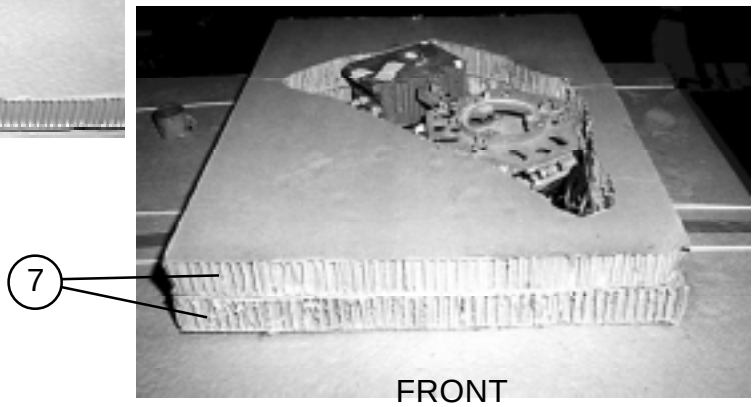

(5) Install the rain gutter protective boards and lashings, and pad the mirrors as shown in Figure 3-3, steps 8 through 11.

(6) Make cutouts in the two-layer honeycomb roof cover (See Figure 3-3, step 7) to allow for the turret fixtures. Tape the upper edges of the honeycomb and tie it to the gutter boards and through the window openings with type III nylon cord.

(7) Face two pieces of 36- by 48-inch honeycomb lengthwise to the truck. Make cutouts to allow for the turret fixtures.

Figure 3-26. Outside and Top of Striker Truck Prepared (continued)

Notes:
1. This drawing is not drawn to scale.
2. All dimensions are in inches.

8

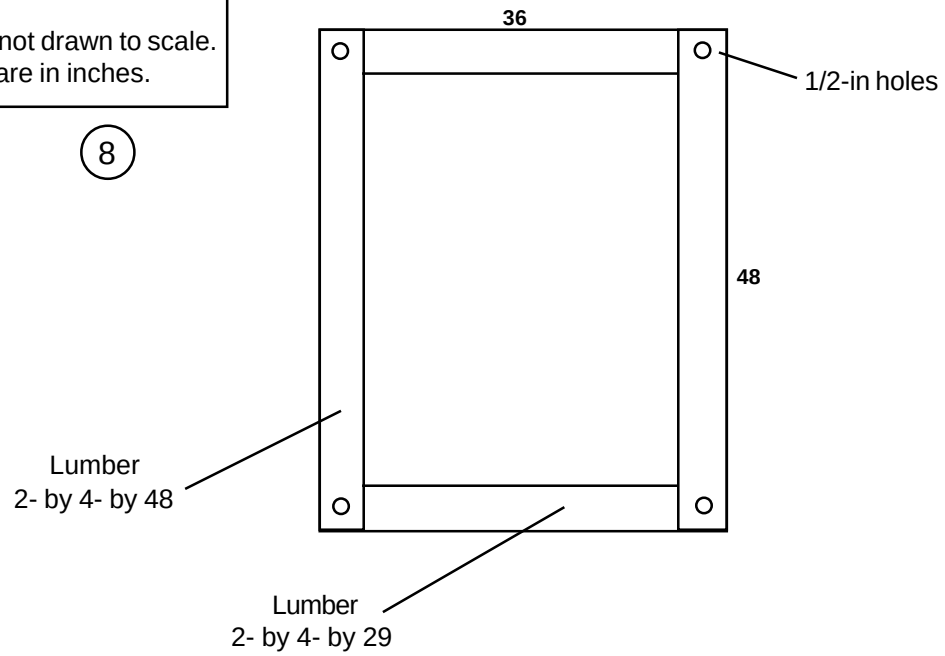

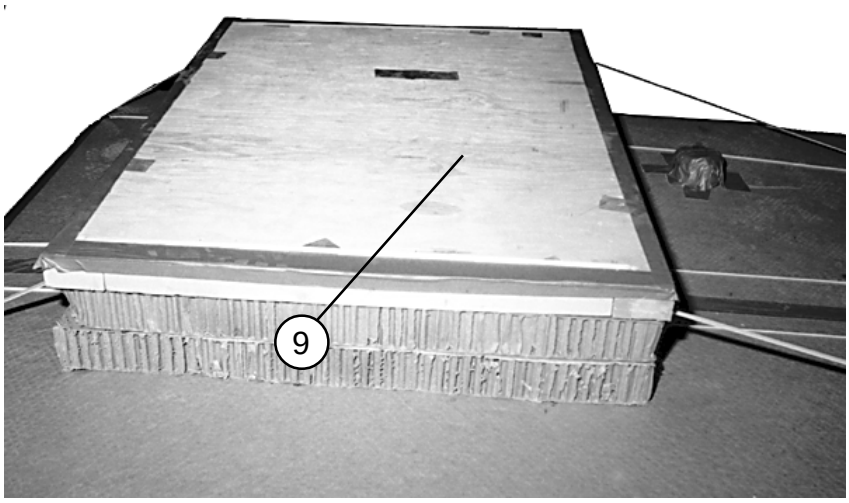

8 Construct the turret cover of 3/4-inch plywood and 2- by 4-inch lumber as shown. Nail the lumber to the edges of the plywood with 8d nails. Tape the upper edges of the plywood.

9 Place the cover flush over the 36- by 48-inch honeycomb placed in step 8 above. Tie the plywood cover from the 1/2-inch holes to convenient points inside the truck with 1/2-inch tubular nylon webbing.

Figure 3-26. Outside and Top of Striker Truck Prepared (continued)

LIFTING AND POSITIONING TRUCK AND INSTALLING DRIVE-OFF AIDS

3-37. Install the lifting slings and position the truck on the honeycomb stacks as shown in Figure 2-16. Attach the drive-off aids to the wheels of the truck as shown in Figure 2-17, and according to FM 4-20.102/TO 13C7-1-5.

LASHING TRUCK

3-38. Lash the truck to the platform with fifteen 15-foot tie-down assemblies. Install the lashings according to FM 4-20.102/TO 13C7-1-5, and as shown in Figures 3-27 and 3-28.

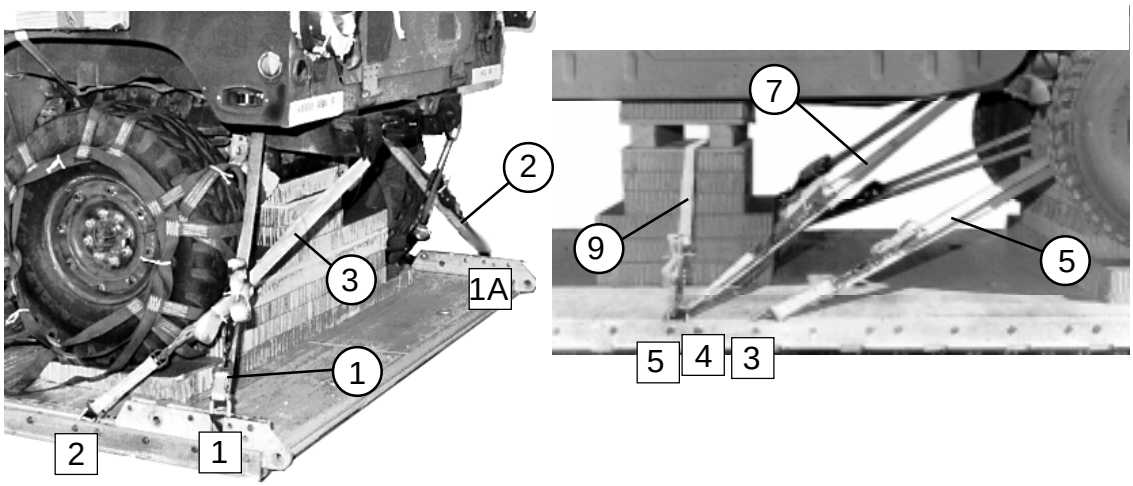

Lashing Number	**Tie-down** Clevis Number	**Instructions**
		Pass lashing:
1	1	Through tie-down bracket behind left rear coil spring.
2	1A	Through tie-down bracket behind right rear coil spring.
3	2	Through left rear lifting shackle.
4	2A	Through right rear lifting shackle.
5	3	Around left rear lower control arm.
6	3A	Around right rear lower control arm.
7	4	Through tie-down bracket in front of left rear coil spring.
8	4A	Through tie-down bracket in front of right rear coil spring.
9	5 and 5A	Pass a 15-foot lashing through clevis 5A and through its own D-ring. Pass the lashing through the hole in stack 2. Attach the lashing to clevis 5 with a load binder.

Figure 3-27. Lashings 1 Through 9 Installed

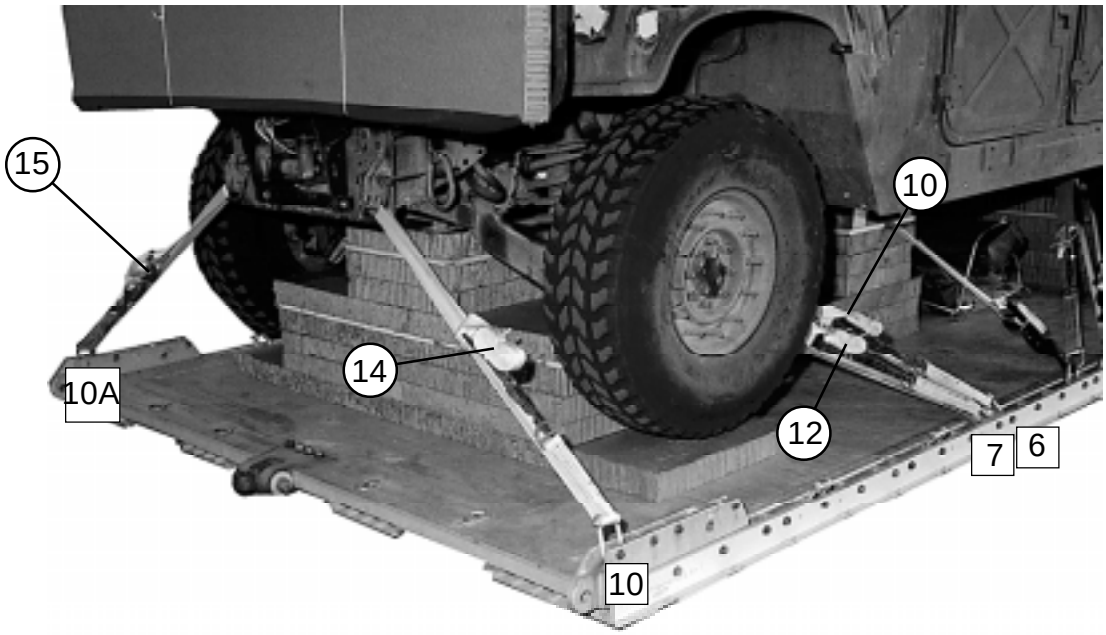

Lashing Number	**Tie-down** Clevis Number	**Instructions**
		Pass lashing:
10	6	Through tie-down bracket behind left front coil spring.
11	6A	Through tie-down bracket behind right front coil spring.
12	7	Around left lower control arm.
13	7A	Around right lower control arm.
14	10	Through shackle on left side of bumper.
15	10A	Through shackle on right side of bumper

Figure 3-28. Lashings 10 Through 15 Installed

INSTALLING AND SAFETY TYING SUSPENSION SLINGS

3-39. Install and safety tie four 16-foot (2-loop), type XXVI nylon suspension slings according to FM 4-20.102/TO 13C7-1-5, and as shown in Figure 3-5.

STOWING CARGO PARACHUTES

3-40. Use three G-11 cargo parachutes on this load. Prepare and stow the cargo parachutes according to FM 4-20.102/TO 13C7-1-5, and as shown in Figure 3-29.

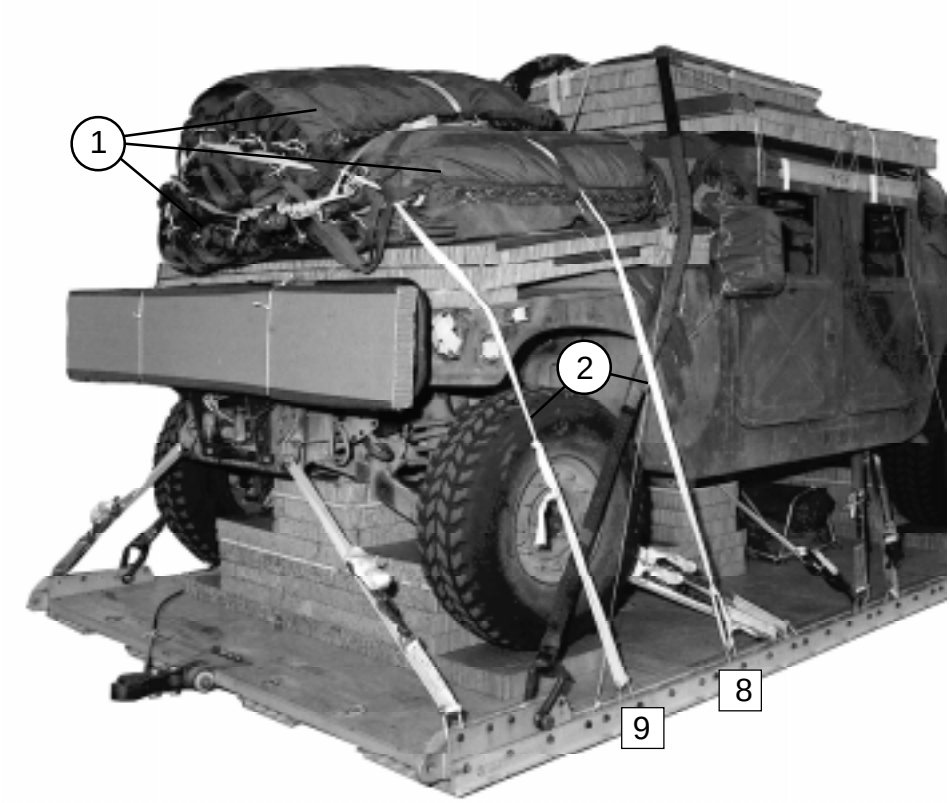

(1) Place and cluster three G-11 cargo parachutes on the honeycomb over the truck hood accordingto FM 4-20.102/TO 13C7-1-5.

(2) Tie the type VIII nylon webbing restraint straps to clevises 8 and 8A and to clevises 9 and 9A.

Figure 3-29. Cargo Parachutes Stowed

INSTALLING PARACHUTE RELEASE

3-41. Prepare and install an M-1 cargo parachute release according to FM 4-20.102/TO 13C7-1-5, and as shown in Figure 3-30.

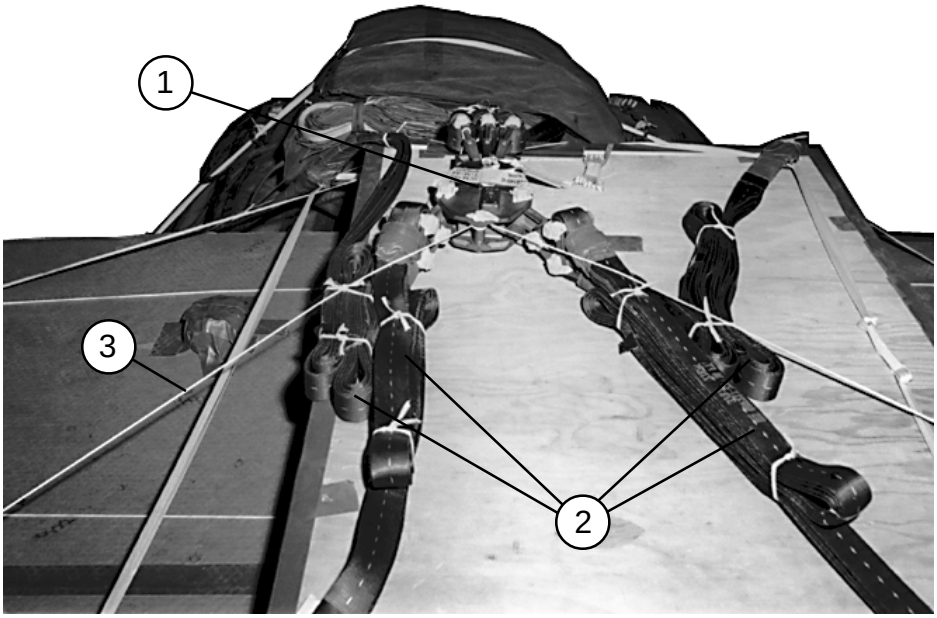

1. Place the M-1 release in front of the upper parachute on the plywood turret cover.
2. S-fold the slack in the suspension slings. Tie the folds with type I 1/4-inch cotton webbing.
3. Attach the suspension slings and the riser extensions to the relese. Tie the release to convenient points on the load with type III nylon cord tied over the suspension slings.

Figure 3-30. M-1 Cargo Parachute Release Installed

INSTALLING EXTRACTION SYSTEM

3-42. Install the EFTC extraction system according to FM 4-20.102/TO 13C7-1-5, and as shown in Figure 2-23.

INSTALLING PROVISIONS FOR EMERGENCY RESTRAINTS

3-43. Install the provisions for emergency restraints on the load according to FM 4-20.102/TO 13C7-1-5.

PLACING EXTRACTION PARACHUTE

3-44. Select the extraction parachute and extraction line needed using the extraction line requirements table in FM 4-20.102/TO 13C7-1-5. Rig the extraction line in an extraction line bag according to TM 10-1670-286-20/TO 13C5-2-41. Place the extraction parachute and extraction line on the load for installation in the aircraft.

MARKING RIGGED LOAD

3-45. Mark the rigged load according to FM 4-20.102/TO 13C7-1-5, and as shown in Figure 3-31. Complete Shipper's Declaration for Dangerous Goods according to AFJMAN 24-204/TM 38-250. If the load varies from the one shown, the weight, height, CB, and parachute requirements must be recomputed.

EQUIPMENT REQUIRED

3-46. Use the equipment listed in Table 3-3 to rig this load. The equipment for rigging the accompanying load is included in Table 3-1.

CAUTION
Make the final rigger inspection required by FM 4-20.102/ TO 13C7-1-5 before the load leaves the rigging site.

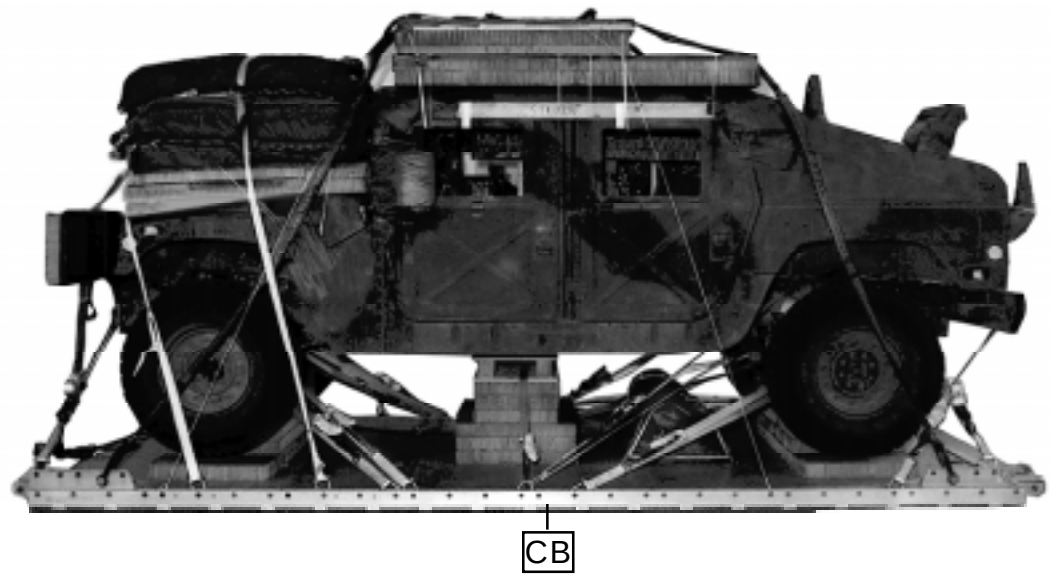

RIGGED LOAD DATA

Weight: Load shown	11,389 pounds
Maximum load allowed	11,500 pounds
Height (with three G-11 parachutes)	98 inches
Width	108 inches
Length (overall)	215 inches
Overhang: Front	0 inches
Rear (EFTC)	18 inches
CB (from front edge of platform)	97 inches

Figure 3-31. M1025 Armament Carrier Rigged With Striker for Low-Velocity Airdrop on a 16-Foot Platform

Table 3-3. Equipment Required for Rigging Striker Carrier on a 16-Ft Airdrop Platform

National Stock Number	Item	Quantity
8040-00-273-8713	Adhesive, paste, 1-gal	As required
4030-00-090-5354	Clevis, suspension, 1-in (large)	5
4020-00-240-2146	Cord, nylon, type III, 550-lb	As required
1670-00-434-5785	Coupling assembly, airdrop, extraction force transfer with cable, 16-ft	1
	Cover:	
1670-00-360-0328	Clevis, large	1
8135-00-664-6958	Cushioning material, packaging, cellulose wadding	As required
8305-00-958-3685	Felt, 1/2-in thick	As required
1670-01-183-2678	Leaf, extraction line (line bag)	2
	Line, drogue (for C-17)	
1670-01-062-6313	60-ft (3-loop), type XXVI	1
	Line, extraction:	
1670-01-062-6313	For C-130: 60-ft (3-loop), type XXVI	1
1670-01-107-7651	For C-141: 140-ft (3-loop), type XXVI	1
	For C-5:	
1670-01-062-6313	60-ft, (3-loop), type XXVI and	1
1670-01-107-7651	140-ft (3-loop), type XXVI	1
	For C-17:	
1670-01-107-7651	140-ft (3-loop), type XXVI	1
	Link Assembly:	
	Two-point:	7
5306-00-435-8994	Bolt, 1-in diam, 4-in long	(14)
5310-00-232-5165	Nut, 1-in, hexagonal	(14)
1670-00-003-1953	Plate, side, 3 3/4-in	(14)
5365-00-007-3414	Spacer, large	(14)
	Lumber:	
5510-00-220-6146	2- by 4-in	As required
5510-00-220-6448	2- by 6-in	As required
5510-00-220-6274	4- by 4-in	As required
5315-00-010-4659	Nail, steel wire, 8d	As required

Table 3-3. Equipment Required for Rigging Striker Carrier on a 16-Ft Airdrop Platform (continued)

National Stock Number	Item	Quantity
1670-00-753-3928	Pad, energy-dissipating (honeycomb) 3- by 36- by 96-in	13 sheets
	Parachute:	
	Cargo:	
1670-01-016-7841	G-11B	3
	Cargo extraction:	
1670-01-063-3716	22-ft (for C-17 aircraft, use H-block with this parachute)	1
	Drogue (for C-17)	
1670-01-063-3715	15-ft	1
	Platform, airdrop, type V, 16-ft	
1670-01-353-8425	Bracket assembly, EFTC	(1)
1670-01-162-2372	Clevis assembly, type V	(20)
1670-01-162-2376	Bracket assembly, extraction	(1)
1670-01-162-2381	Tandem link assembly (Multipurpose link)	(4)
5530-00-128-4981	Plywood, 3/4-in	4 sheets
1670-01-097-8816	Release, cargo parachute, M-1	1
	Sling, cargo, airdrop	
	For suspension:	
1670-01-063-7761	16-ft (2-loop), type XXVI nylon webbing	4
	For lifting:	
1670-01-062-6304	9-ft (2-loop), type XXVI nylon webbing	2
1670-01-062-6303	12-ft (2-loop), type XXVI nylon webbing	2
	For deployment:	
1670-01-062-6304	9-ft (2-loop), type XXVI nylon webbing	1
	For riser extension:	
1670-01-062-6302	20-ft (2-loop), type XXVI nylon webbing	6
5340-00-040-8219	Strap, parachute release, multi-cut, comes w/ 3 knives	2
7510-00-266-5016	Tape, adhesive, 2-in	As required
1670-00-937-0271	Tie-down assembly, 15-foot	21
1670-01-344-0825	Vehicle drive-off aid	1
	Webbing:	
8305-00-268-2411	Cotton, 1/4-in, type I	As required
8305-00-082-5752	Nylon, tubular, 1/2-in	As required
8305-00-263-3591	Type VIII	As required

CHAPTER 4

RIGGING EXPANDED CAPACITY HMMWV-SERIES TRUCKS FOR LOW-VELOCITY AIRDROP

SECTION I - RIGGING M1113 TRUCK WITH M56 SMOKE GENERATOR ON A 16-FOOT PLATFORM

DESCRIPTION OF LOAD

4-1. The M1113 HMMWV-series truck has a heavy-duty suspension and is rigged the same as the M998 truck except as noted. The truck is rigged on a 16-foot, type V airdrop platform for low-velocity airdrop. The M56 Smoke Generator is shown as the accompanying load. The procedure for rigging the M56 smoke generator in the truck is given in this chapter. An accompanying load weighing a minimum of 800 pounds and a maximum of 2,500 pounds must be rigged in the truck. The load requires three G-11 cargo parachutes.

PREPARING PLATFORM

4-2. Prepare a 16-foot, type V airdrop platform according to TM 10-1670-268-20&P/TO 13C7-52-22. Install four tandem links and 18 load tie-down clevises according to FM 4-20.102/TO 13C7-1-5, and as shown in Figure 4-1.

NOTES:
1. The nose bumper may or may not be installed.
2. Measurements given in the instructions for this load are from the front edge of the platform, NOT from the front edge of the nose bumper.

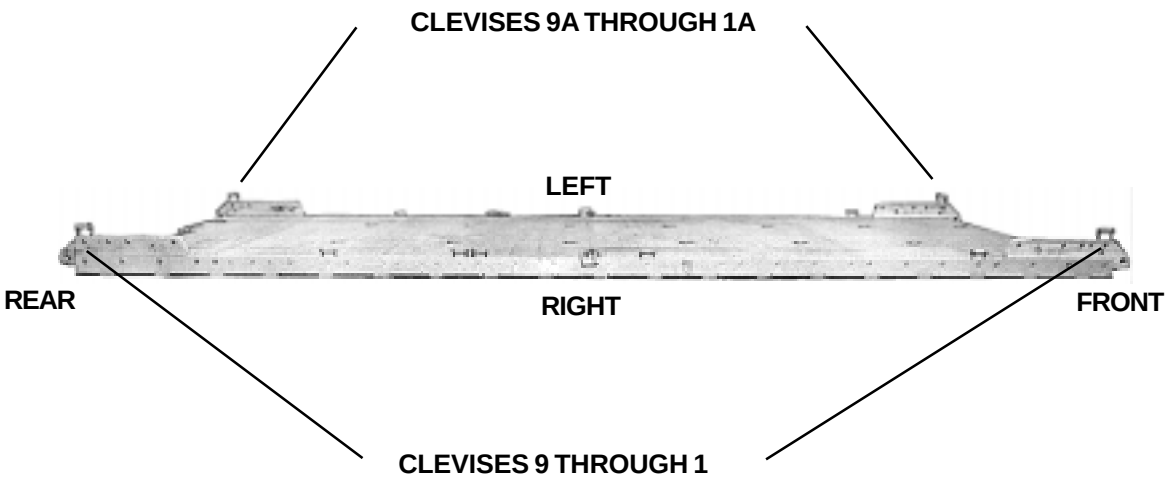

Step:

1. Install a tandem link on the front of each platform side rail using holes 1, 2, and 3.
2. Install a tandem link on the rear of each platform side rail using holes 30, 31, and 32.
3. Install a clevis on bushing 1 of each front tandem link.
4. Install a clevis on bushing 4 of each rear tandem link.
5. Starting at the front of the platform, install clevises on each platform side rail using the bushings bolted on holes 5, 15, 20, 21 and 25.
6. Install a clevis on bushing 17 in an inverted position. Install a bushing on clevis 17A in the normal position. Bolt an additional clevis to each of these clevises.
7. Starting at the front of the platform, number the clevises bolted to the right side of the platform from 1 through 9, and those bolted to the left side from 1A through 9A. Number the clevises on the 17th bushings 5 and 5A. Number the clevises bolted to these clevises clevises 4 and 4A.
8. Label the tie-down rings according to FM 4-20.102/TO 13C7-1-5.

Figure 4-1. Platform Prepared

PREPARING AND POSITIONING HONEYCOMB STACKS

4-3. Build the honeycomb stacks as shown in Figures 4-2 through 4-4. Position the stacks on the platform as shown in Figure 4-5.

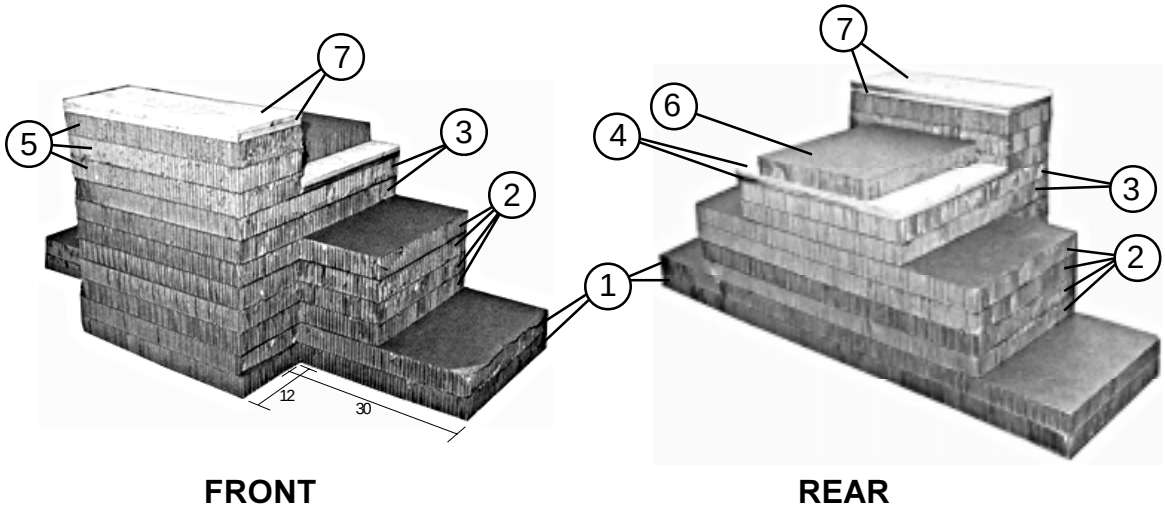

1. Make 12- by 30-inch cutouts in the left and right front corners of two 36- by 90-inch pieces of honeycomb. Glue the two pieces flush together to form the base.
2. Make 12- by 12-inch cutouts in the left and right front corners of four 36- by 54-inch pieces of honeycomb. Glue the four pieces flush together over the base.
3. Center two 30- by 36-inch pieces of honeycomb over the pieces placed in step 2, and glue them in place.
4. Nail two 30- by 24-inch pieces of 3/4-inch plywood together. Glue the plywood flush over the rear edges of the honeycomb placed in step 3 above.
5. Glue three 30- by 12-inch pieces of honeycomb to the front of the stack, aligned with the plywood.
6. Center and glue a 20 -by 24-inch piece of honeycomb over the plywood.
7. Nail two 30- by 12-inch pieces of 3/4-inch plywood together, and glue the plywood flush over the honeycomb placed in step 5 above.

Figure 4-2. Stack 1 Constructed

Note: 1. This drawing is not drawn to scale.
2. All dimensions are in inches.

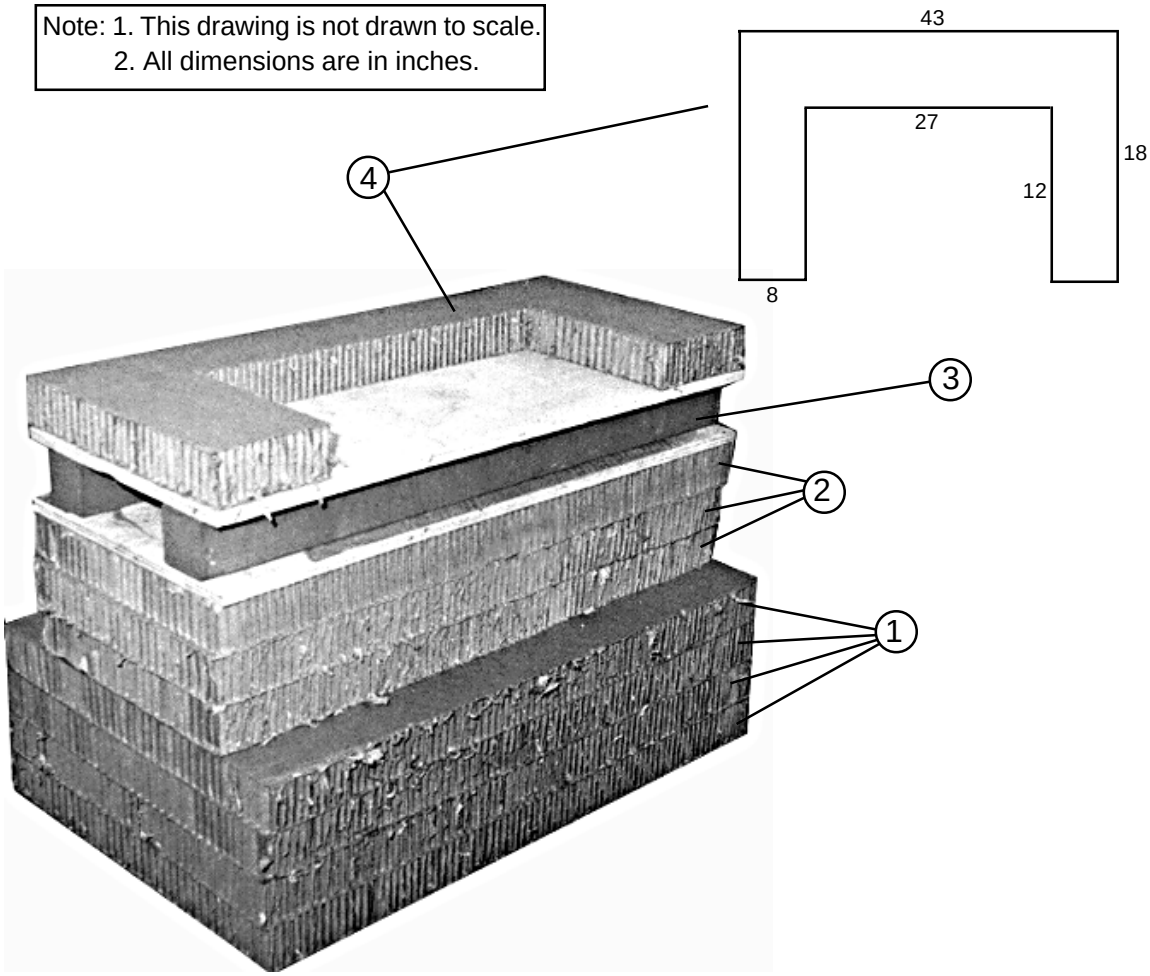

1. Glue four 43- by 26-inch pieces of honeycomb together to form a base.

2. Center and glue three 43- by 18-inch pieces of honeycomb over the base.

3. Nail a 43-inch piece of 4- by 4-inch lumber parallel to each long side and 1 1/2 inches from each long edge of a 3/4- by 43- by 18-inch piece of plywood. Nail a second 3/4- by 43- by 18-inch piece of plywood to the lumber and flush with the bottom piece of plywood. Glue the wood section of the stack flush on the honeycomb placed in step 2 above.

4. Make the cutout as shown in a 43- by 18-inch piece of honeycomb. Glue the honeycomb flush over the plywood, with the cutout facing the rear of the stack.

Figure 4-3. Stack 2 Constructed

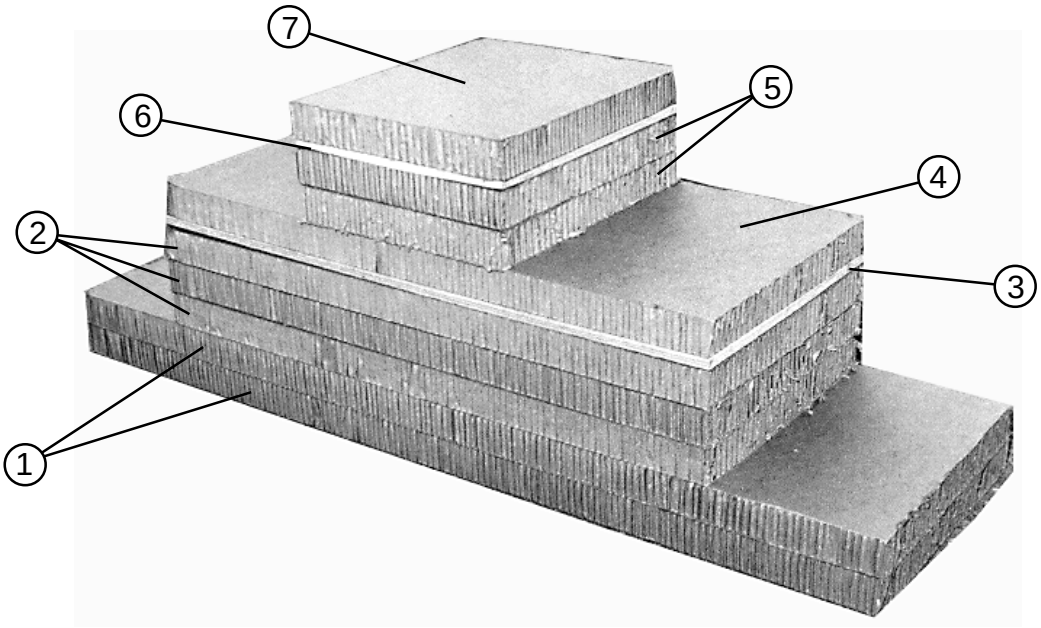

1. Glue two 80- by 24-inch pieces of honeycomb together to form a base.
2. Center and glue three 54- by 24-inch pieces of honeycomb on the base.
3. Glue a 3/4- by 54- by 24-inch piece of plywood over the honeycomb placed in step 2 above.
4. Glue a 54- by 24-inch piece of honeycomb over the plywood placed in step 3 above.
5. Center and glue two 20- by 24-inch pieces of honeycomb on top of the honeycomb placed in step 4 above.
6. Glue a 3/4- by 20- by 24-inch piece of plywood over the honeycomb placed in step 5 above.
7. Glue a 20- by 24-inch piece of honeycomb on top of the plywood placed in step 6 above.

Figure 4-4. Stack 3 Constructed

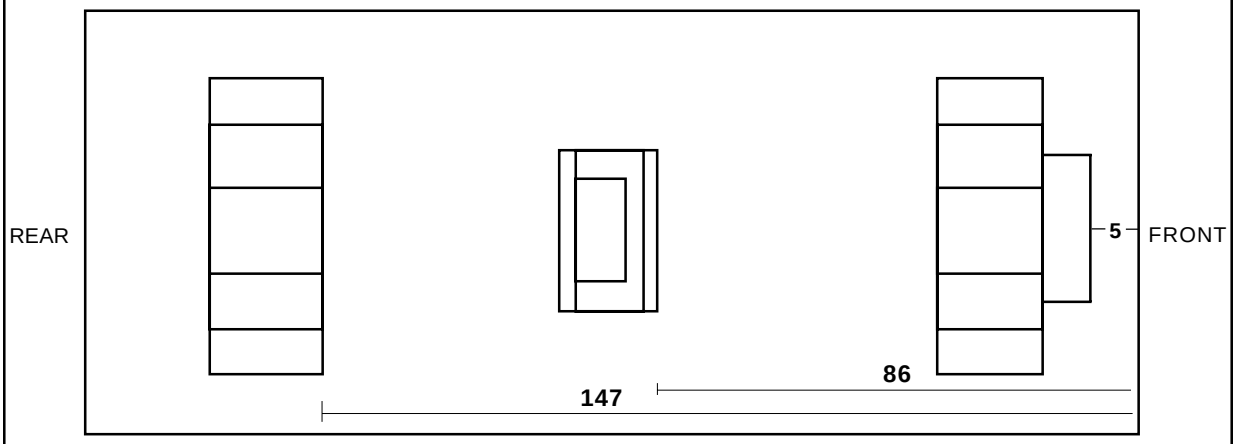

Stack Number	Position of Stack on Platform
1	Place stack: 5 inches from the front edge of the platform and centered.
2	86 inches from the front edge of the platform and centered. Face the cutout to the rear.
3	147 inches from the front edge of the platform and centered.

Figure 4-5. Honeycomb Stacks Positioned on Platform

PREPARING TRUCK AND SMOKE GENERATOR

4-4. Prepare the truck and the smoke generator as described below.

a. Prepare the truck as described in Paragraphs 2-4a through e, and h, and as shown in Figures 2-6 and 2-7.

b. Remove the pioneer tool kit from the rear underside of the truck and stow it in the cargo bed.

c. Prepare the cab of the truck as shown in Figure 2-8, and remove the rifle clips as shown in Figure 4-6.

d. Secure and pad radio equipment in the cab as shown in Figure 2-9.

e. Remove the breather cap and fording stack and stow them in the truck as shown in Figure 4-7.

f. Prepare the front of the truck as shown in Figure 2-10. Use the modification shown in Figure 4-8. Place a 4- by 78-inch piece of honeycomb along the front edge of the hood. Also, cover the hood with one piece of honeycomb cut as shown in Figure 2-10, step 6, instead of with two pieces.

g. Prepare the truck body as shown in Figure 2-13.

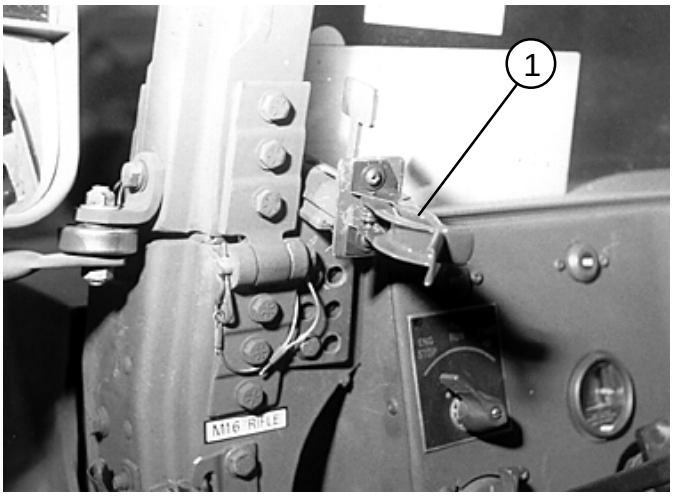

(1) Remove any weapons clip attached to the windshield frame.

Figure 4-6. Weapons Clip

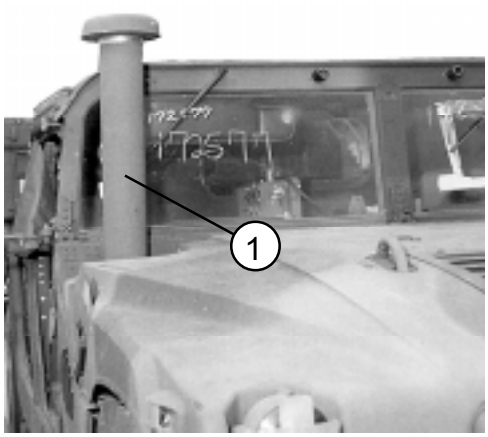

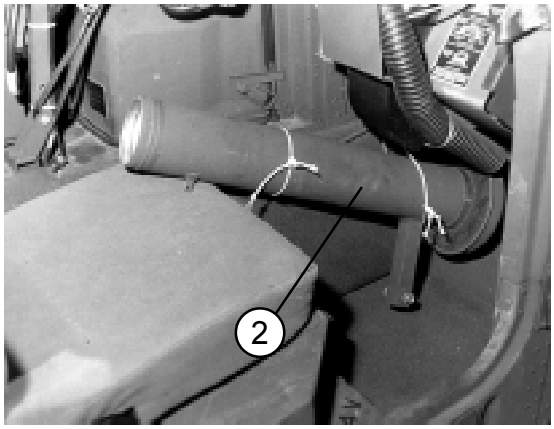

1 Remove the breather cap and fording stack. Leave the cap attached to the stack.

2 Tie the cap and stack in the passenger footwell with type III nylon cord.

Figure 4-7. Fording Kit Removed and Stowed

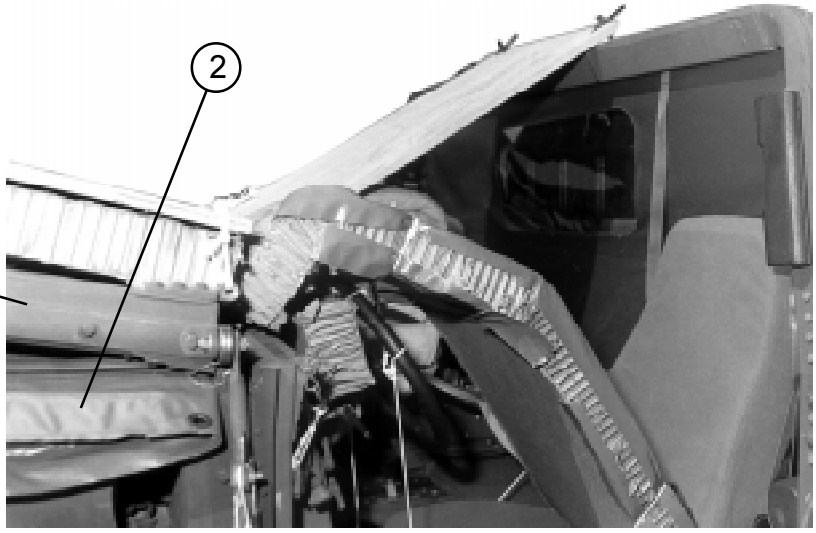

1 Remove the fabric cab cover from its fasteners at the rear of the cab. Remove the roof bows. Do not detach the cab cover from its fasteners on the windshield frame.

2 Before folding the windshield, bring the cab cover over the front of the windshield. Rest the windshield on the folded cab cover. The cover must occupy the space between the honeycomb on which the front of the windshield rests and the windshield hinges.

3 Fold the windshield down over the cab cover and any padding.

Figure 4-8. Windshield Folded Over the Cab Cover

h. Prepare the smoke generator as shown in Figure 4-9.

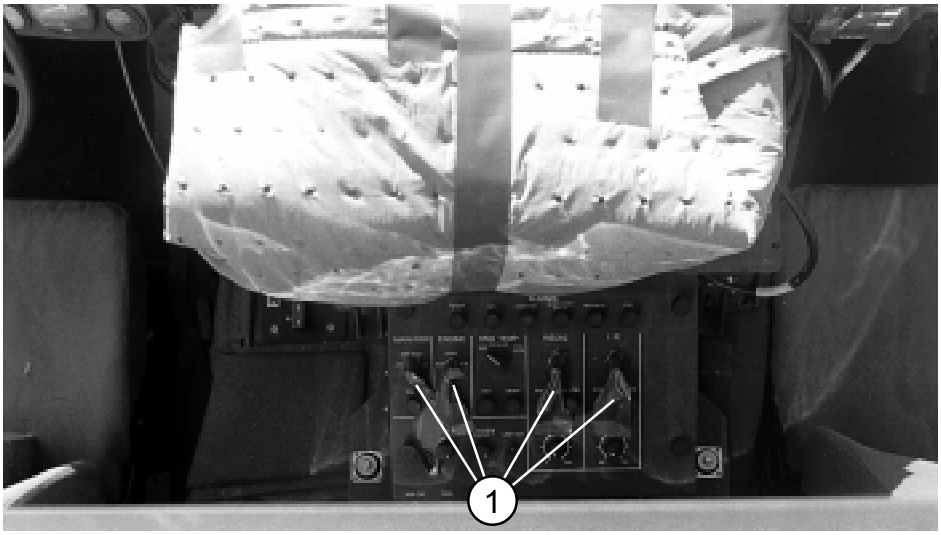

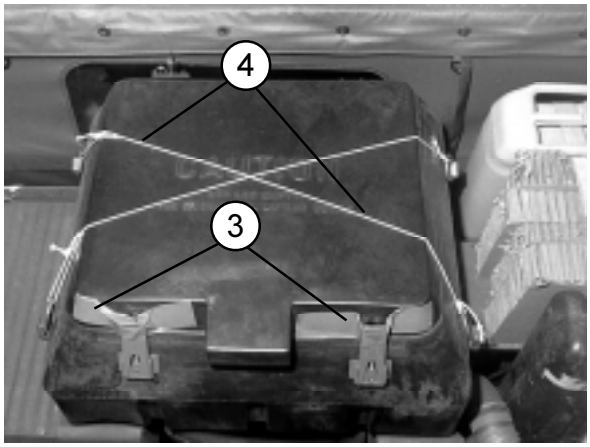

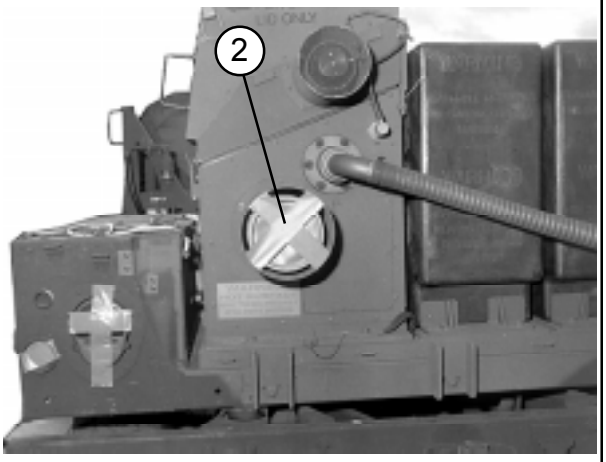

1. Tape the switches on the smoke generator control panel to the OFF position.
2. Tape the exhaust port cover in place.
3. Tape the latches on the IR hopper, and any other latches elsewhere on the smoke generator.
4. Secure the IR hatch cover with two lengths of type III nylon cord.

Figure 4-9. Smoke Generator Prepared

i. Stow and secure the smoke generator equipment and truck doors as shown in Figure 4-10.

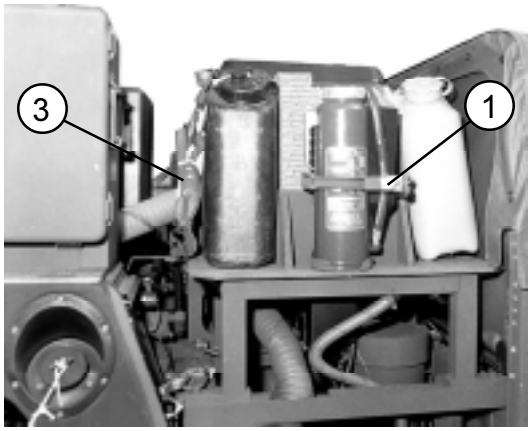

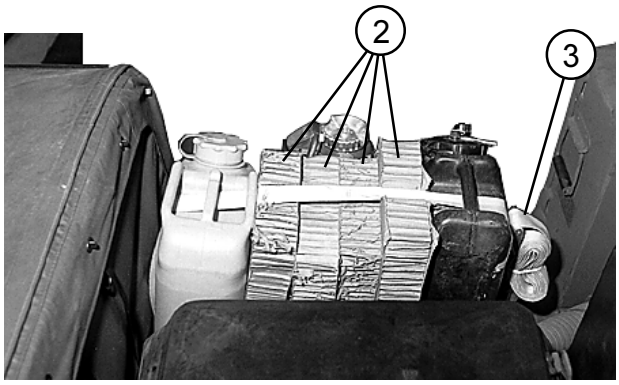

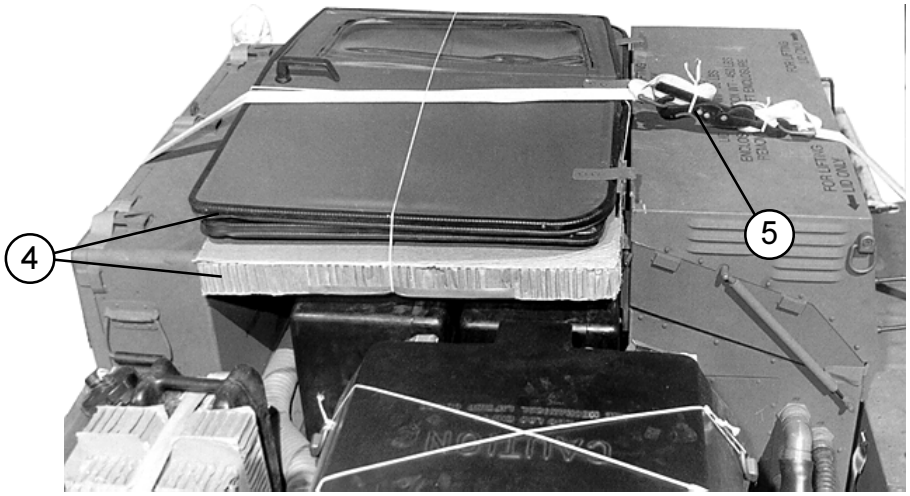

1. Tape the external fire extinguisher latch closed.
2. Pad between the water and fuel cans with four pieces of honeycomb.
3. Pass a 15-foot lashing under the platform, and over the cans through their carrying handles. Secure the lashing at the rear.
4. Place a 33- by 44-inch piece of honeycomb over the fog oil tanks. Tie the truck doors over the honeycomb with two lengths of type III nylon cord.
5. When the lashings securing the body side boards are installed, pass the lashing at the rear of the truck over the smoke generator and the truck doors as shown.

Figure 4-10. Fuel Cans, Water Cans, and Truck Doors Secured

LIFTING AND POSITIONING TRUCK, INSTALLING OPTIONAL DRIVE-OFF AIDS, AND STOWING SPREADER BAR

4-5. Install the optional drive-off aids on the platform as shown in Figure 2-15. Install lifting slings on the truck and position the truck on the honeycomb stacks as shown in Figure 2-16. Install the spreader bar assembly on the lifting slings to protect the smoke generator from damage.

CAUTION
USE OF THE SPREADER BAR IS ESSENTIAL. FAILURE TO COMPLY WILL RESULT IN DAMAGE TO THE EQUIPMENT.

Install the drive-off aids, if used, to the rear wheels of the truck as shown in Figure 2-17. Stow the spreader bar, roof bows, and whip antenna as shown in Figure 4-11.

LASHING TRUCK

4-6. Lash the truck to the platform with fifteen 15-foot tie-down assemblies as shown in Figures 4-12 and 4-13, and according to FM 4-20.102/TO 13C7-1-5.

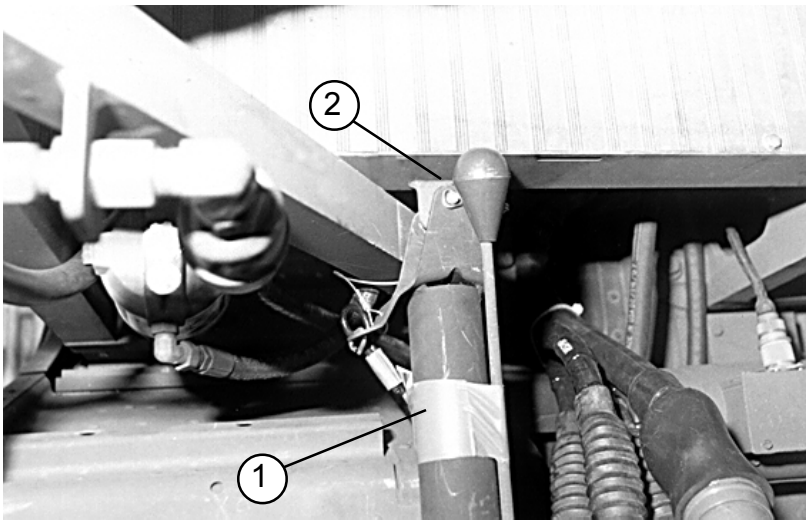

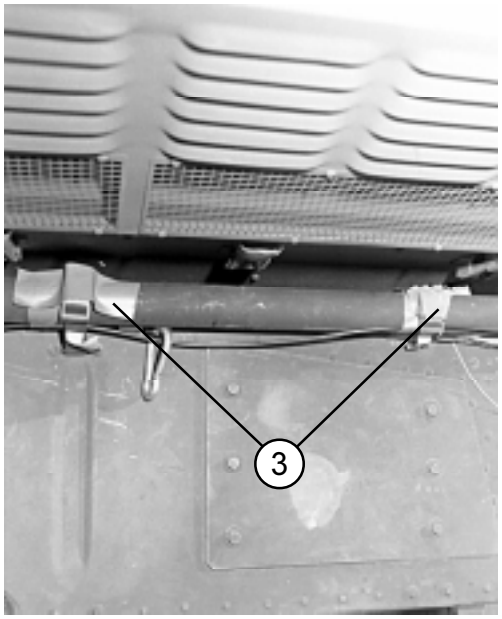

1. Tape the cab bows and antenna to the spreader bar. The tip of the antenna and the end of the spreader bar are shown in the first photograph.
2. Secure the end of the spreader bar to the bracket provided on the equipment platform with the bar's pin.
3. Place the spreader bar in its original location in the truck cargo area, and secure it with the fasteners provided. Tape the fasteners shut.

Figure 4-11. Spreader Bar, Antenna, and Cab Bows Stowed

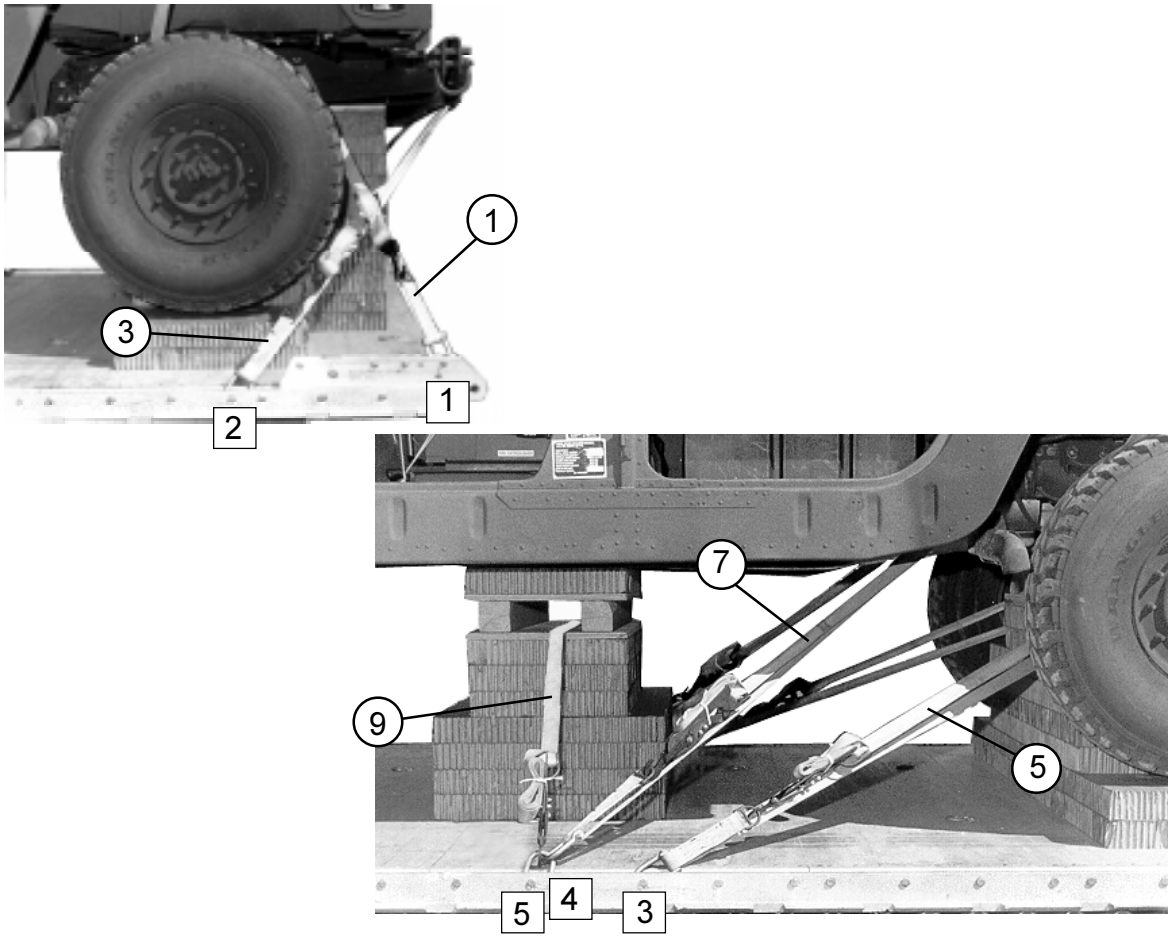

Lashing Number	**Tie-down** Clevis Number	**Instructions**
		Pass lashing:
1	1	Through tie-down bracket behind left rear coil spring.
2	1A	Through tie-down bracket behind right rear coil spring.
3	2	Through left rear lifting shackle.
4	2A	Through right rear lifting shackle.
5	3	Around left rear lower control arm.
6	3A	Around right rear lower control arm.
7	4	Through tie-down bracket in front of left rear coil spring.
8	4A	Through tie-down bracket in front of right rear coil spring.
9	5 and 5A	Pass a 15-foot lashing through clevis 5A and through its own D-ring. Pass the lashing through the hole in stack 2. Attach the lashing to clevis 5 with a load binder.

Figure 4-12. Lashings 1 Through 9 Installed

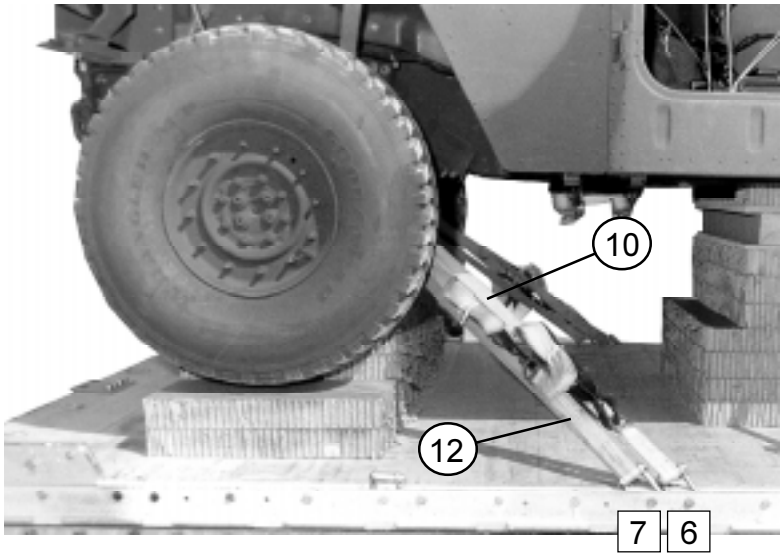

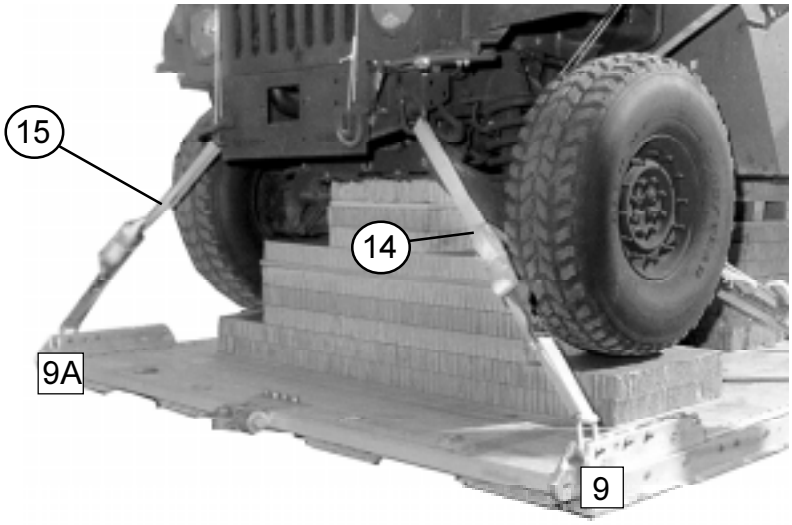

Lashing Number	**Tie-down** Clevis Number	**Instructions**
		Pass lashing:
10	6	Through tie-down bracket behind left front coil spring.
11	6A	Through tie-down bracket behind right front coil spring.
12	7	Around left lower control arm.
13	7A	Around right lower control arm.
14	9	Through tie-down bracket on end of left frame rail.
15	9A	Through tie-down bracket on end of right frame rail.

Figure 4-13. Lashings 10 Through 15 Installed

INSTALLING AND SAFETY TYING SUSPENSION SLINGS

4-7. Install and safety tie four 16-foot (2-loop), type XXVI nylon suspension slings as shown in Figure 2-20.

STOWING CARGO PARACHUTES

4-8. Stow and restrain three G-11 cargo parachutes on the load according to FM 4-20.102/TO 13C7-1-5. Install two type VIII nylon webbing restraint straps. Tie the front restraint straps to clevises 8 and 8A. Tie the rear restraint straps to the 27th bushings on the platform side rails.

INSTALLING PARACHUTE RELEASE

4-9. Prepare and install an M-1 cargo parachute release according to FM 4-20.102/TO 13C7-1-5, and as shown in Figure 2-22 .

INSTALLING EXTRACTION SYSTEM

4-10. Install the EFTC extraction system according to FM 4-20.102/TO 13C7-1-5, and as shown in Figure 2-23.

INSTALLING PROVISIONS FOR EMERGENCY RESTRAINTS

4-11. Install provisions for emergency restraints according to FM 4-20.102/TO 13C7-1-5.

PLACING EXTRACTION PARACHUTE

4-12. Select the extraction parachute and extraction line needed, using the extraction line requirements table in FM 4-20.102/TO 13C7-1-5. Rig the extraction line in a line bag according to TM 10-1670-286-20/TO 13C5-2-41. Place the extraction parachute and extraction line on the load for installation in the aircraft.

MARKING RIGGED LOAD

4-13. Mark the rigged load according to FM 4-20.102/TO 13C7-1-5, and as shown in Figure 4-14. Complete Shipper's Declaration for Dangerous Goods according to AFJMAN 24-204/TM 38-250. If the load varies from the one shown, the weight, height, CB, and parachute requirements must be recomputed.

EQUIPMENT REQUIRED

4-14. Use the equipment listed in Table 4-1 to rig this load.

CAUTION
Make the final rigger inspection required by FM 4-20.102/ TO 13C7-1-5 before the load leaves the rigging site.

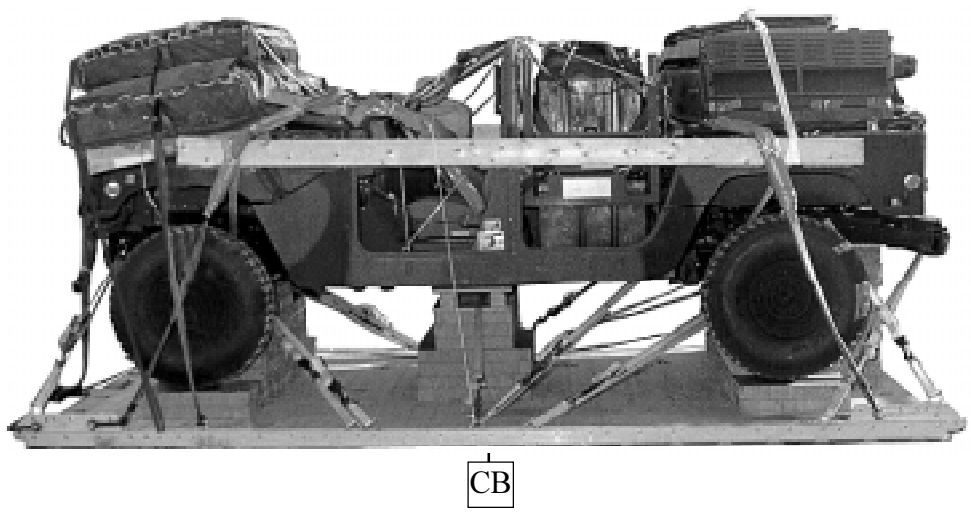

RIGGED LOAD DATA

Weight: Load shown	11,960 pounds
Maximum load allowed	12,710 pounds
Height (with three G-11B parachutes)	97 inches
Width	108 inches
Length (overall)	215 inches
Overhang: Front	8 inches
Rear (EFTC)	18 inches
CB (from front edge of platform)	91 inches

Figure 4-14. M56 Smoke Generator Rigged in M1113 Truck for Low-Velocity Airdrop

Table 4-1. Equipment Required for Rigging the M1113 truck with M56 Smoke Generator for Low-Velocity Airdrop

National Stock Number	Item	Quantity
8040-00-273-8713	Adhesive, paste, 1-gal	As required
4030-00-090-5354	Clevis, suspension, 1-in (large)	5
4020-00-240-2146	Cord, nylon, type III, 550-lb	As required
1670-00-434-5785	Coupling assembly, airdrop, extraction force transfer with cable, 16-ft	1
1670-00-360-0328	Cover, clevis, large	1
8135-00-664-6958	Cushioning material, packaging, cellulose wadding	As required
8305-00-958-3685	Felt, 1/2-in thick	As required
1670-01-183-2678	Leaf, extraction line (line bag)	2
	Line, drogue (for C-17)	
1670-01-064-4452	60-ft (3-loop), type XXVI	1
	Line, extraction:	
1670-01-062-6313	For C-130: 60-ft (3-loop), type XXVI	1
1670-01-107-7651	For C-141: 140-ft (3-loop), type XXVI	1
	For C-5:	
1670-01-062-6313	60-ft (3-loop), type XXVI and	1
1670-01-107-7651	140-ft (3-loop), type XXVI	1
	For C-17:	
1670-01-107-7651	140-ft (3-loop), type XXVI	1
	Link assembly, Two-point:	1
5306-00-435-8994	Bolt, 1-in diam, 4-in long	(2)
5310-00-232-5165	Nut, 1-in, hexagonal	(2)
1670-00-003-1953	Plate, side, 3 3/4-in	(2)
5365-00-007-3414	Spacer, large	(2)
	Lumber:	
5510-00-220-6448	2- by 6-in	As required
5510-00-220-6274	4- by 4-in	As required
5315-00-010-4659	Nail, steel wire, 8d	As required

Table 4-1. Equipment Required for Rigging the M1113 Truck with M56 Smoke Generator for Low-Velocity Airdrop (continued)

National Stock Number	Item	Quantity
1670-00-753-3928	Pad, energy-dissipating (honeycomb) 3- by 36- by 96-in	13 sheets
	Parachute:	
	Cargo:	
1670-01-016-7841	G-11B	3
	Cargo extraction:	
1670-01-063-3716	22-foot ((for C-17, use H-block with this parachute)	1
	Drogue (for C-17)	
1670-01-063-3715	15-ft	1
	Platform, airdrop, type V, 16-ft	
1670-01-353-8425	Bracket assembly, EFTC	(1)
1670-01-162-2372	Clevis assembly, type V	(20)
1670-01-353-8424	Bracket assembly, extraction	(1)
1670-01-162-2381	Tandem link assembly (Multipurpose link)	(4)
5530-00-128-4981	Plywood, 3/4-in	4 sheets
1670-01-097-8816	Release, cargo parachute, M-1	1
	Sling, cargo, airdrop	
	For suspension:	
1670-01-063-7761	16-ft (2-loop), type XXVI nylon webbing	4
	For lifting:	
1670-01-062-6304	9-ft (2-loop), type XXVI nylon webbing	2
1670-01-062-6303	12-ft (2-loop), type XXVI nylon webbing	2
	For deployment:	
1670-01-062-6304	9-ft (2-loop), type XXVI nylon webbing	1
	For riser extension:	
1670-01-062-6313	60-ft (3-loop), type XXVI nylon webbing	3
4910-01-313-8839	Spreader bar assembly	1
5340-00-040-8219	Strap, parachute release, multi-cut, comes w/ 3 knives	2
7510-00-266-5016	Tape, adhesive, 2-in	As required
1670-00-937-0271	Tie-down assembly, 15-foot	20
1670-01-344-0825	Vehicle drive-off aid	1
	Webbing:	
8305-00-268-2411	Cotton, 1/4-in, type I	As required
8305-00-082-5752	Nylon, tubular, 1/2-in	As required
8305-00-263-3591	Type VIII	As required

Section II - RIGGING M1114 UP-ARMORED ARMAMENT CARRIER

DESCRIPTION OF LOAD

4-15. The M1114 HMMWV-series truck has a heavy-duty suspension and additional armor in the sides, door, and floor. The truck is shown in Figure 4-15. The truck is rigged on a 16-foot, type V airdrop platform for low-velocity airdrop. The load requires three G-11 cargo parachutes.

PREPARING PLATFORM

4-16. Prepare a 16-foot, type V airdrop platform according to TM 10-1670-268-20&P/TO 13C7-52-22. Install four tandem links and 18 load tie-down clevises according to FM 4-20.102/NAVSEA SS400-AB-MMO-010/TO 13C7-1-5, and as shown in Figure 4-16.

NOTES:
1. The nose bumper may or may not be installed.
2. Measurements given in the instructions for this load are from the front edge of the platform, NOT from the front edge of the nose bumper.

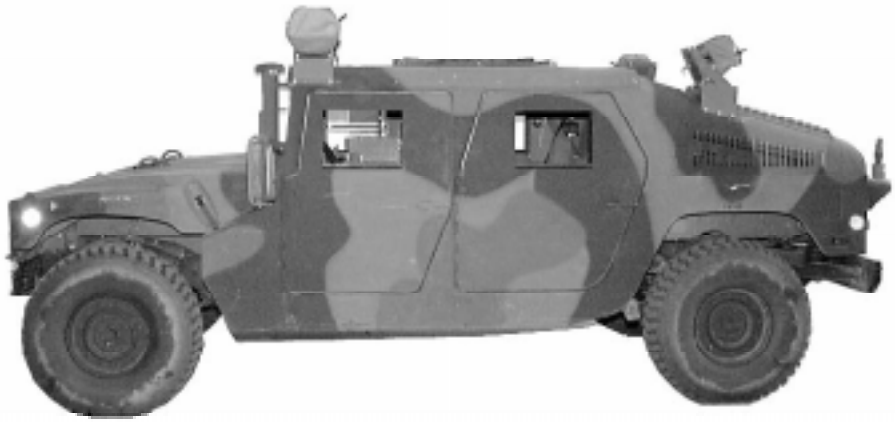

Figure 4-15. M1114 Up-Armored Armament Carrier

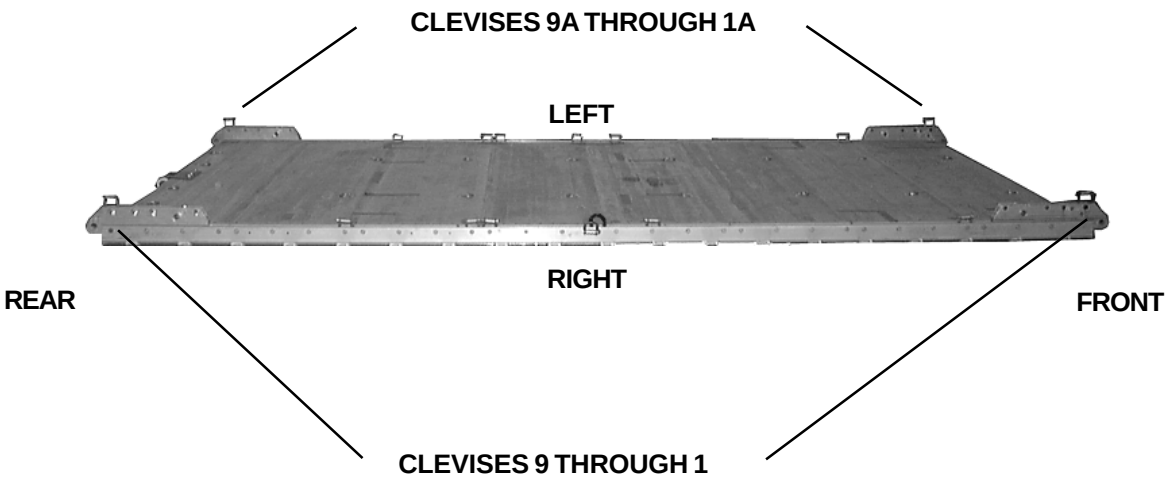

Step:

1. Install a tandem link on the front of each platform side rail using holes 1, 2, and 3.
2. Install a tandem link on the rear of each platform side rail using holes 30, 31, and 32.
3. Install a clevis on bushing 1 of each front tandem link.
4. Install a clevis on bushing 4 of each rear tandem link.
5. Starting at the front of the platform, install clevises on each platform side rail using the bushings bolted on holes 5, 15, 20, 21 and 25.
6. Install a clevis on bushing 17 in an inverted position. Install a bushing on clevis 17A in the normal position. Bolt an additional clevis to each of these clevises.
7. Starting at the front of the platform, number the clevises bolted to the right side of the platform from 1 through 9, and those bolted to the left side from 1A through 9A. Number the clevises on the 17th bushings 5 and 5A. Number the clevises bolted to these clevises clevises 4 and 4A.
8. Label the tie-down rings according to FM 4-20.102/NAVSEA SS400-AB-MMO-010/TO 13C7-1-5.

Figure 4-16. Platform Prepared

PREPARING AND POSITIONING HONEYCOMB STACKS

4-17. Build the honeycomb stacks as shown in Figures 4-17 through 4-19. Position the stacks on the platform as shown in Figure 4-20.

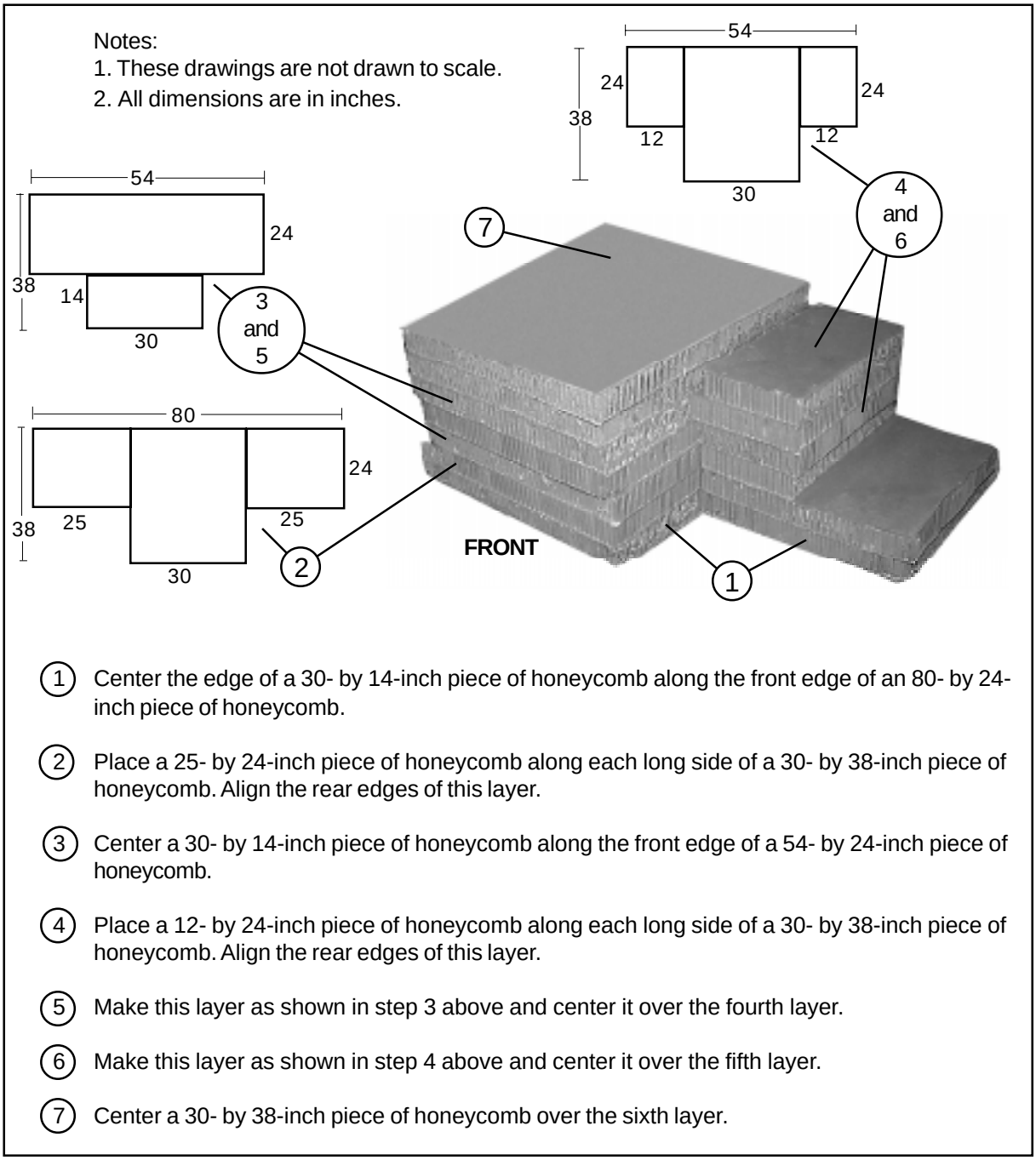

Figure 4-17. Stack 1 Prepared

Notes:
1. These drawings are not drawn to scale.
2. All dimensions are in inches.

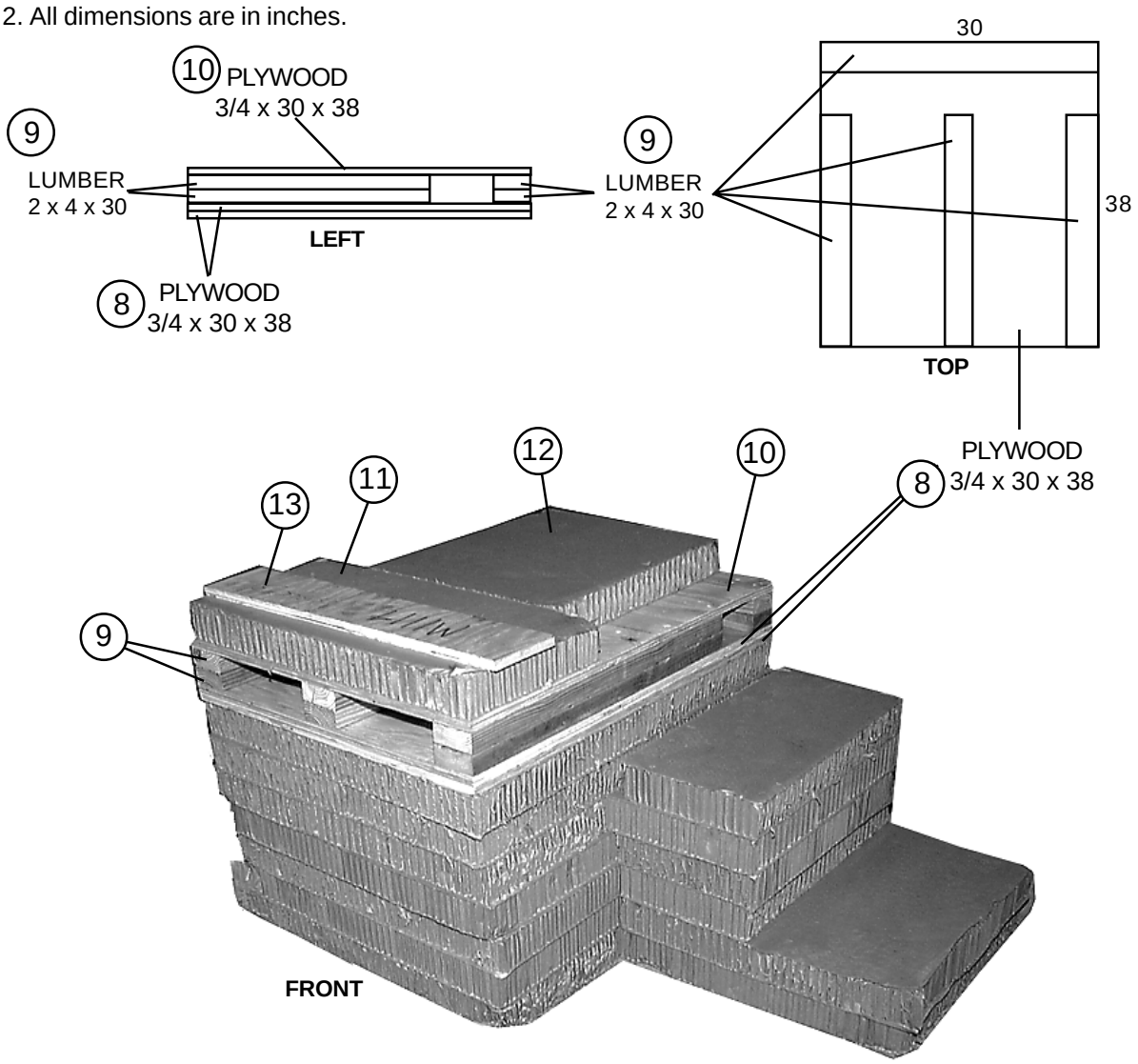

8 Nail two 30- by 38-inch pieces of 3/4-inch plywood flush together.

9 Space and nail eight pieces of 2- by 4-inch lumber in pairs and to the plywood as shown.

10 Nail one 30- by 38-inch piece of 3/4-inch plywood flush over the lumber as shown.

11 Glue a 30- by 14-inch piece of honeycomb flush along the front edge as shown.

12 Center a 20-inch side of a 20- by 24-inch piece of honeycomb along the rear edge of the piece placed in step 11.

13 Glue a 30- by 6-inch piece of 3/4-inch plywood 1 inch from the front edge of the stack.

Figure 4-17. Stack 1 Prepared (continued)

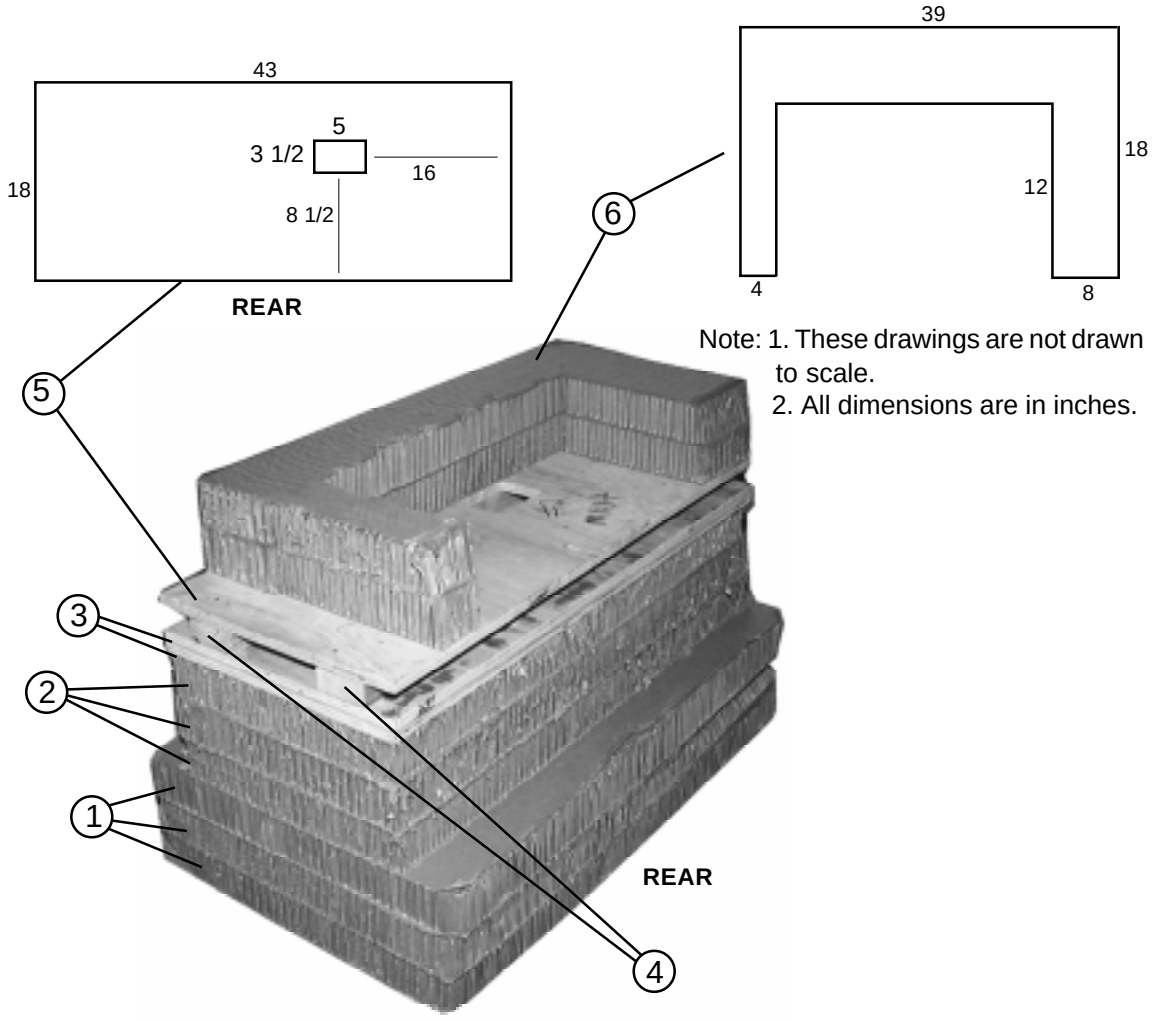

1. Glue three 43- by 26-inch pieces of honeycomb together to form a base.
2. Center and glue three 43- by 18-inch pieces of honeycomb over the base.
3. Nail two 43- by 18-inch pieces of 3/4-inch plywood flush together.
4. Nail a 43-inch piece of 2- by 4-inch lumber flat side down, parallel to each long side, and 3 inches from each long edge of the plywood.
5. Make a 3 1/2- by 5-inch cutout as shown in a third 3/4- by 43- by 18-inch piece of plywood. Nail the plywood to the lumber and flush with the bottom pieces of plywood. Glue the wood section of the stack flush on the honeycomb placed in step 2 above.
6. Make the cutout as shown in two 39- by 18-inch pieces of honeycomb. Glue the honeycomb flush with the right edge of the plywood, with the cutout facing the rear of the stack.

Figure 4-18. Stack 2 Prepared

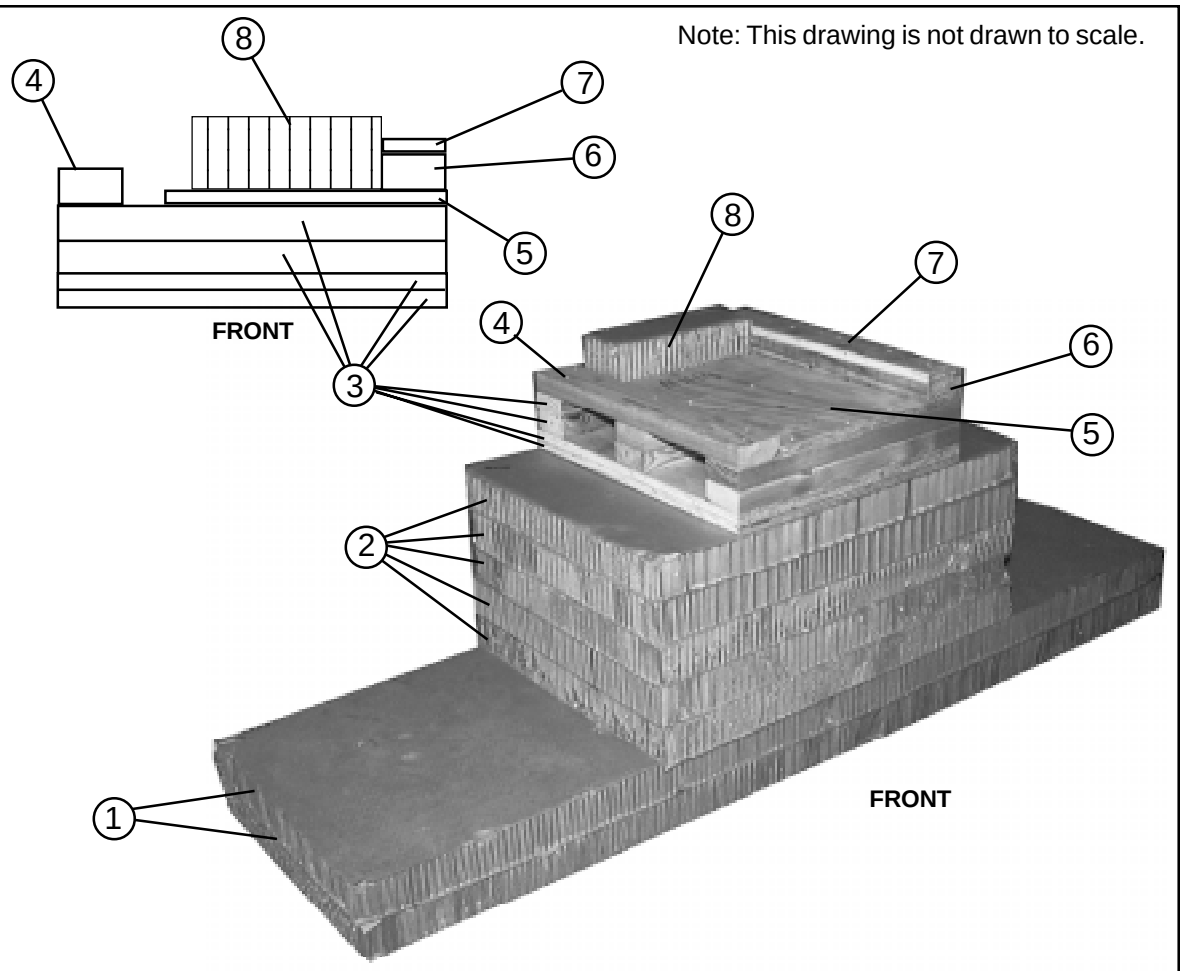

1. Glue two 80- by 24-inch pieces of honeycomb together to form a base.
2. Center and glue five 35- by 24-inch pieces of honeycomb on the base.
3. Nail two 21- by 24-inch pieces of 3/4-inch plywood to each other and to six 21-inch pieces of 2- by 4-inch lumber. Nail the lumber flush along the sides and in the center of the plywood.
4. Nail a 24-inch piece of 2- by 4-inch lumber flush along the right side.
5. Nail a 17- by 24-ich piece of 3/4-inch plywood flush with the left side.
6. Nail a 24-inch piece of 2- by 4-inch lumber flush with the left edge of the plywood placed in step 5 above.
7. Nail a 3 1/2- by 24-inch piece of 3/4-inch plywood flush over the lumber placed in step 6 above.
8. Glue a 13- by 5-inch piece of honeycomb along the rear edge of the plywood flush against the plywood and lumber placed in steps 6 and 7 above.

Figure 4-19. Stack 3 Prepared

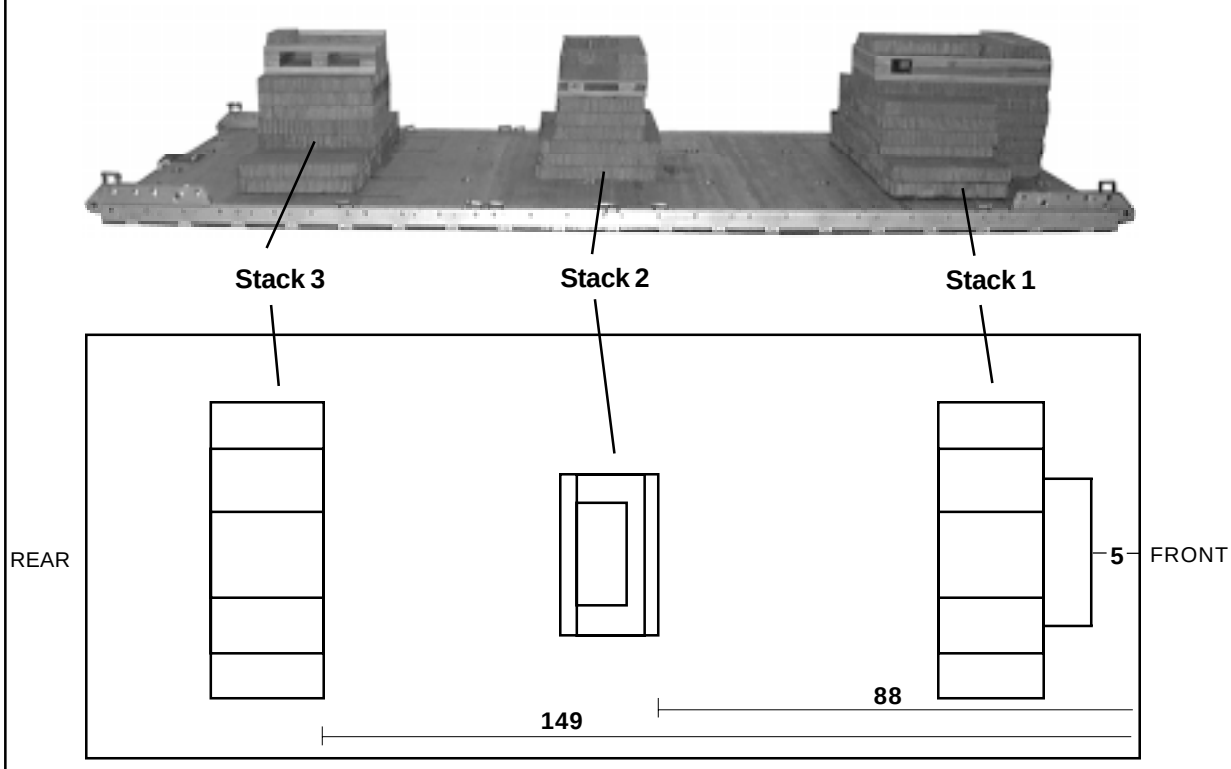

Note: This drawing is not drawn to scale.

Stack Number	Position of Stack on Platform
1	Place stack: 5 inches from the front edge of the platform and centered.
2	88 inches from the front edge of the platform and centered. Face the cutout to the rear.
3	149 inches from the front edge of the platform and centered.

Figure 4-20. Honeycomb Stacks Positioned on Platform

PREPARING TRUCK

4-18. Prepare the truck as described below.

a. Prepare the cab of the truck as shown in Figures 2-8, steps 3 through 10.

b. Prepare the body of the truck as shown in Figure 4-21.

c. Prepare the underside of the truck as shown in Figure 4-22.

d. Prepare the hood and roof of the truck as shown in Figure 4-23.

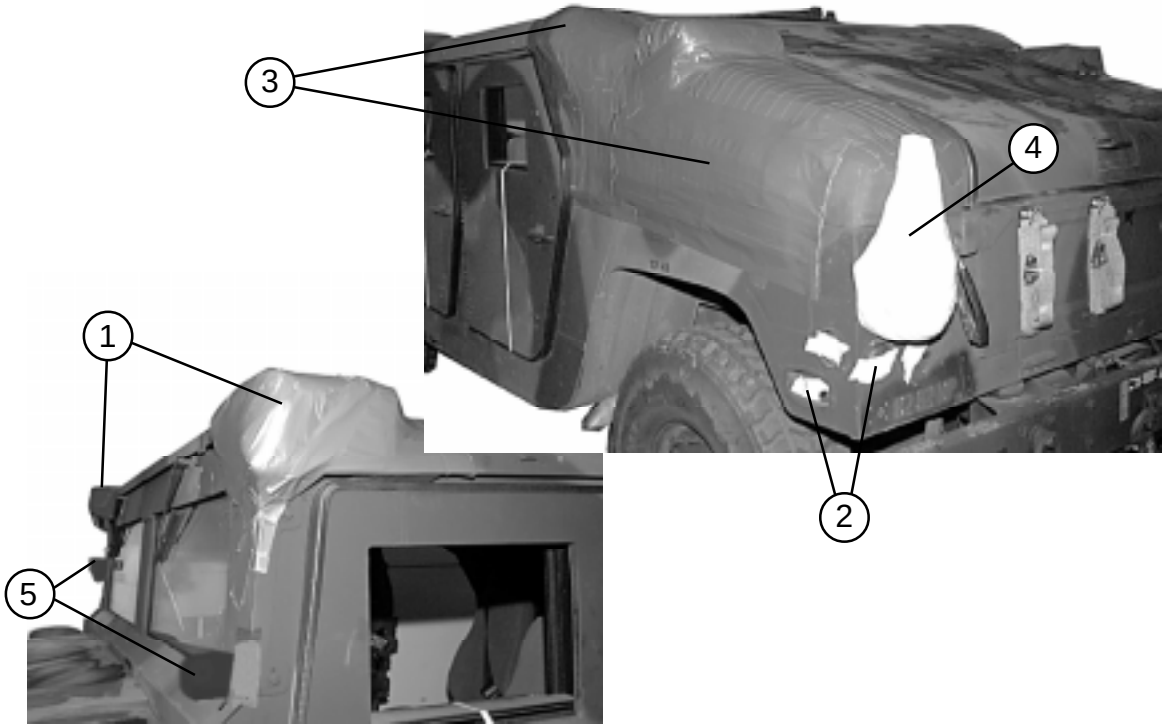

1. Remove the four Light Vehicle Obscuration Smoke System (LVOSS) units from the roof corners. Pad the brackets with felt and cellulose wadding.
2. Tape all lights and reflectors.
3. Pad the air vents and roof corners with felt taped in place.
4. Pad the antenna mounts with cellulose wadding taped in place.
5. Remove the mirrors, pad and tape them, and tie them under the driver's seat. Pad the mirror brackets with felt taped in place.

Figure 4-21. Truck Body Prepared

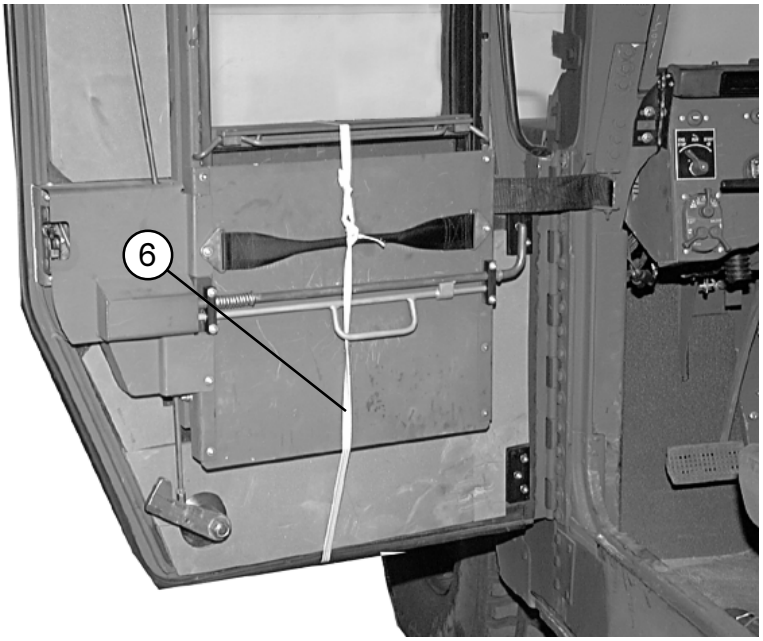

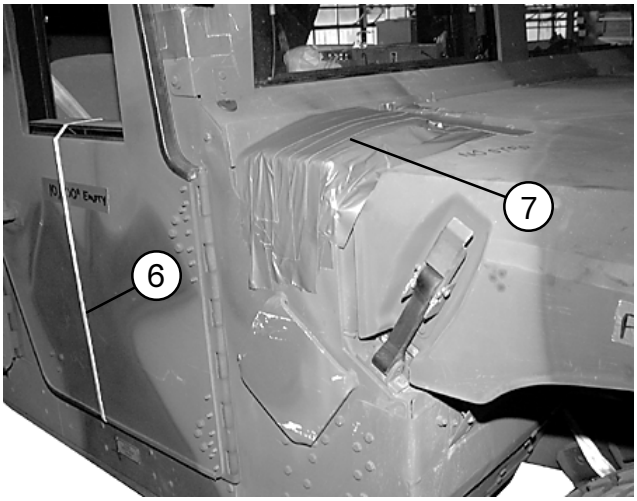

6 Lower all windows. Tie them in the lowered position with 1/2-inch tubular nylon webbing.

7 Remove the breather cap and fording stack. Place a layer of felt over the air intake hole, and tape the felt in place.

Figure 4-21. Truck Body Prepared (continued)

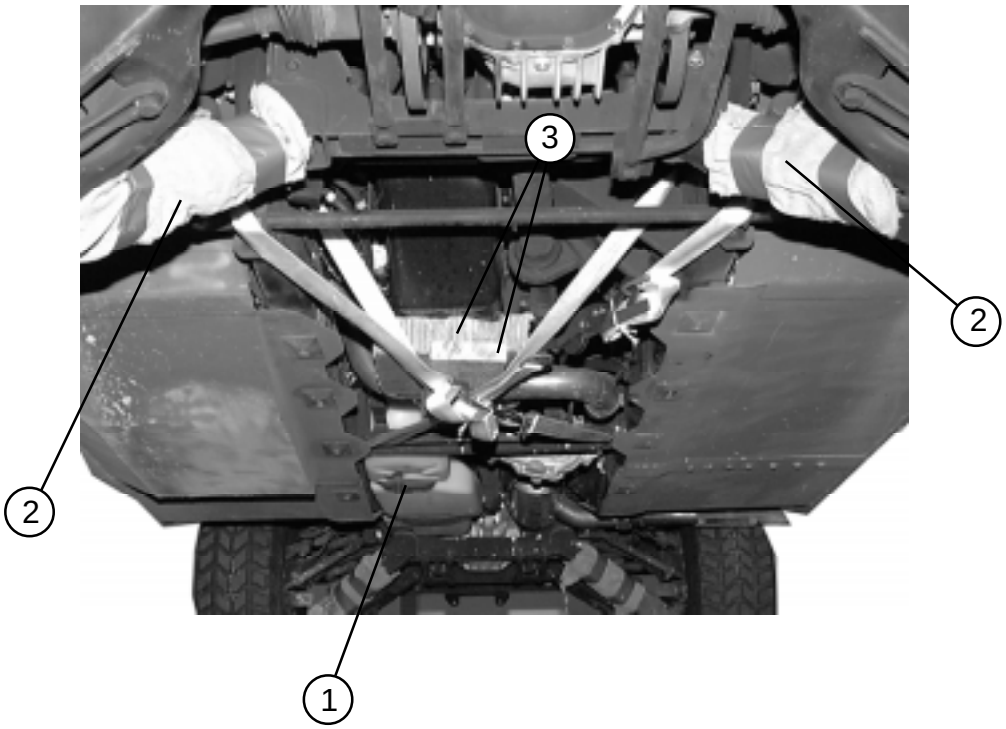

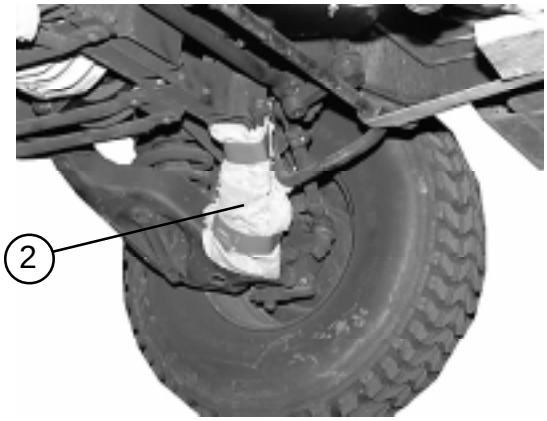

1. Tape the fuel tank drain plug .
2. Pad the lower control arms at the front and rear of the truck with cellulose wadding taped in place.
3. Have a 12- by 12-inch piece of honeycomb and a 16-inch length of 2- by 6-inch lumber ready to place under the oil pan as shown.

Figure 4-22. Underside of Truck Prepared

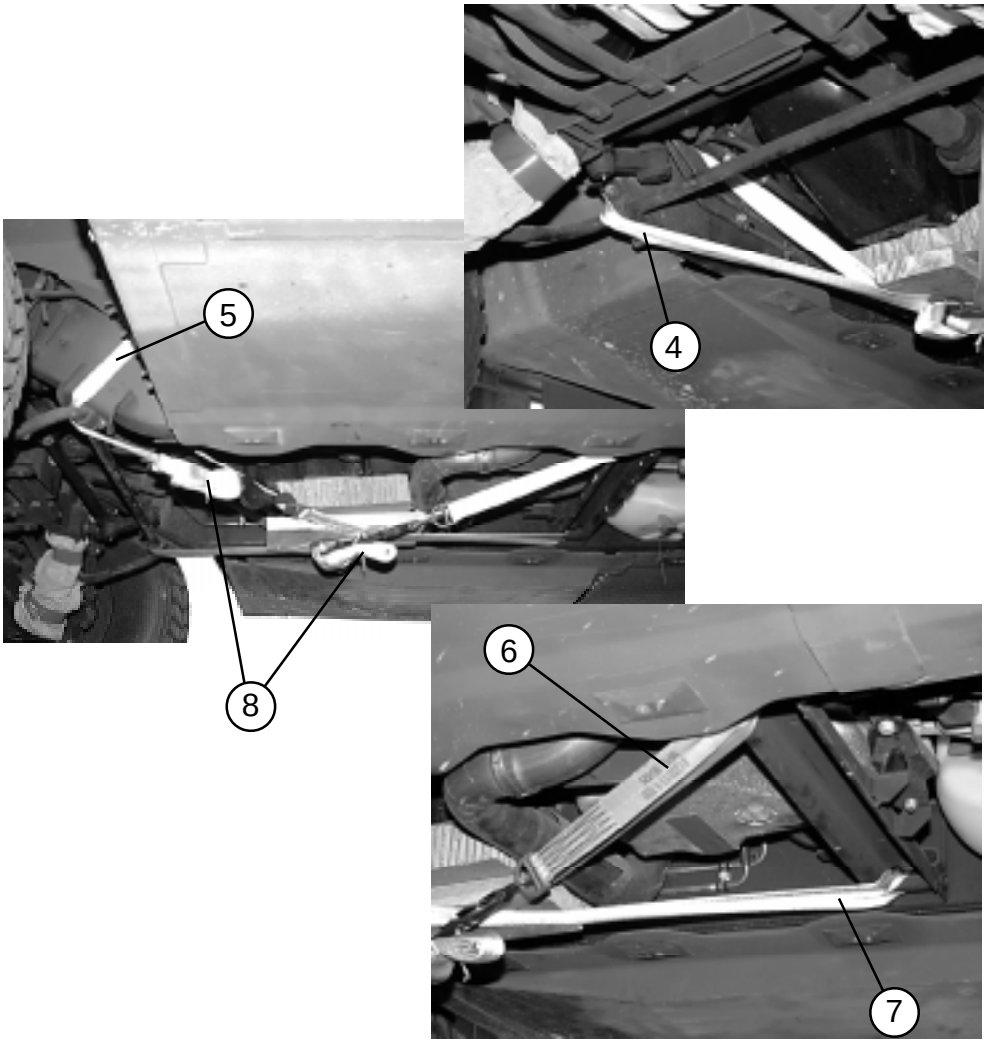

4 Route a 15-foot lashing around the right frame member and to the front side of the stabilizer bar.

5 Route a second 15-foot lashing around the left frame member and around the stabilizer bar.

6 Route the free end of the lashing placed in step 4 around the radius rod on the left side of the crossmember in front of the fuel tank.

7 Route the free end of the lashing placed in step 5 around the radius rod on the right side of the crossmember in front of the fuel tank.

8 Tighten and secure both lashings over the honeycomb and lumber placed under the oil pan. Separate the load binders so that they do not interfere with each other.

Figure 4-22. Underside of Truck Prepared (continued)

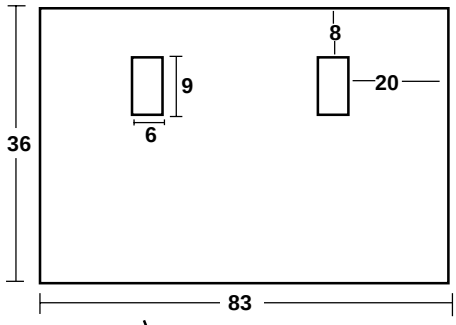

Notes:
1. This drawing is not drawn to scale.
2. All dimensions are in inches.

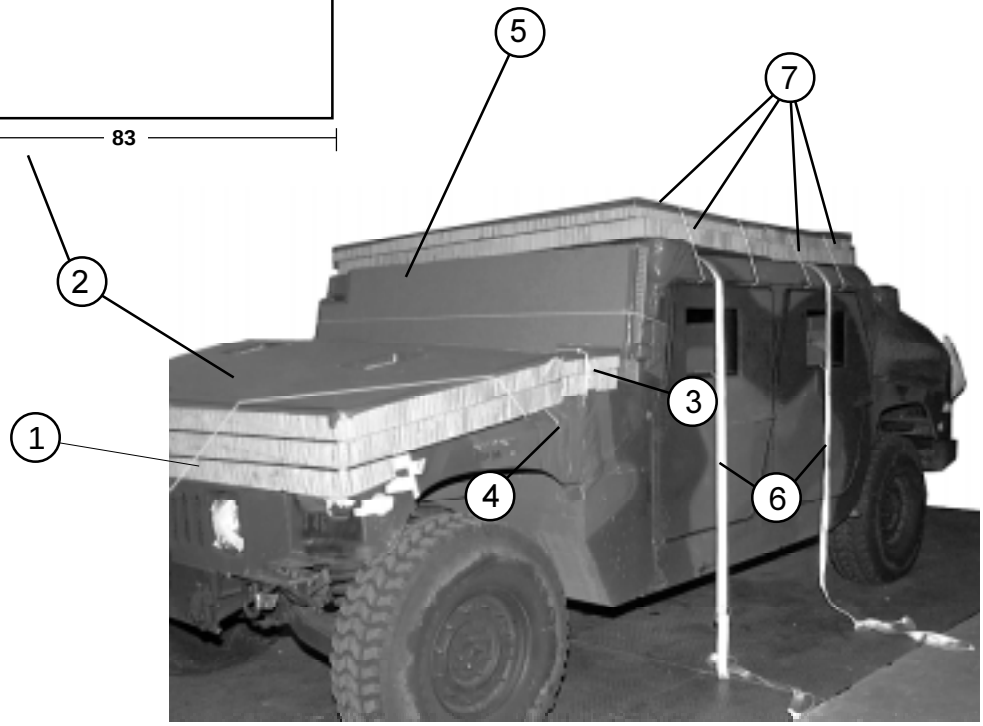

1. Place a 4- by 78-inch piece of honeycomb along the front edge of the hood.

2. Tie two 83- by 36-inch pieces of honeycomb with cutouts as shown to the hood with type III nylon cord. Tape the upper edges of the honeycomb. Route the cord through the grille and tie it on each side to the hood latches.

3. Place two 83- by 12-inch pieces of honeycomb behind the honeycomb placed in step 1. Tape the upper outside edges, and tie the honeycomb to the hood latches with type III nylon cord.

4. Tape the hood latches.

5. Tie an 83- by 21-inch piece of honeycomb to the windshield. Tape the outside edges and tie the type III nylon cord through the door openings and around the honeycomb.

6. Center two 30-foot lashings across the width of the roof. Center one lashing over the front window openings, and one lashing over the rear window openings.

7. Place four full sheets of honeycomb on the roof. Crush or cut out to allow for the turret fixtures. Tape the upper edges of the honeycomb. Tie the honeycomb to the roof through the door

Figure 4-23. Hood and Roof Covered

Stowing Load in M1114 Truck

4-19. Stow mission equipment in the truck cargo compartment as shown in Figure 4-24. Stow items in the cab area as shown in Figure 4-25. Install the wood side protection boards as shown in Figure 4-26.

CAUTION
Only ammunition listed in FM 10-500-53/MCRP 4-3.81/TO 137-18-41 may be airdropped. Package, label, and mark hazardous material according to AFJMAN 24-204/TM 38-250.

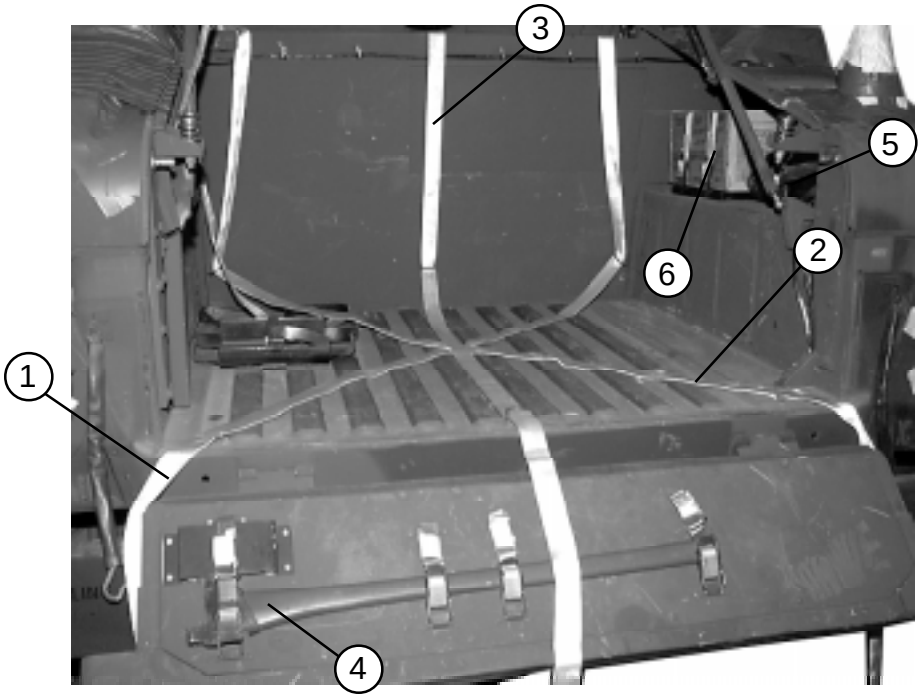

1. Route a lashing through the left rear and right front cargo bed rings.
2. Route a lashing through the right rear and left front cargo bed rings.
3. Route a lashing through the front center and rear center cargo bed rings.
4. Secure the axe in its mount on the tailgate with the straps provided.
5. Secure the jack and MAX tool kit in the right storage area over the wheel well with the straps provided.
6. Place one box of 9-mm ammunition in the right wheel well cargo area and secure it with the straps provided.

Figure 4-24. Accompanying Load Stowed in Cargo Bed

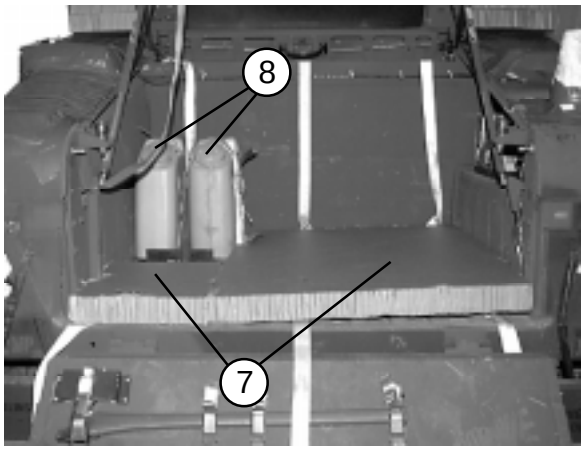

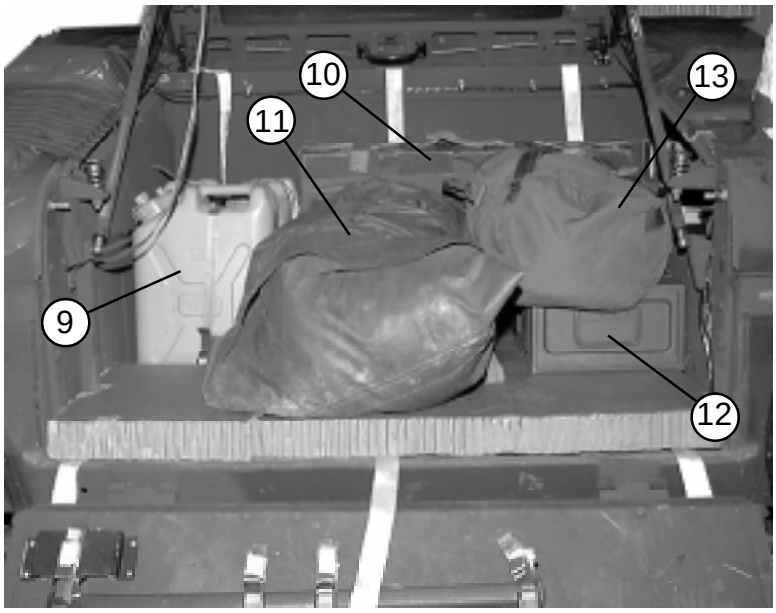

(7) Cover the hatch bed with a 36- by 47-inch and a 15- by 20-inch piece of honeycomb.

(8) Secure two fuel cans in the stowage brackets with the straps provided.

(9) Secure one water can behind the fuel cans in the stowage bracket with the straps provided.

(10) Place the route signing kit in the right front.

(11) Place the Light Scattering-Screen (LSS) nets in the center.

(12) Place the Enemy Prisoner of War (EPW) kit to the right of the LSS nets.

(13) Place the team bag over the EPW kit box.

Figure 4-24. Accompanying Load Stowed in Cargo Bed (continued)

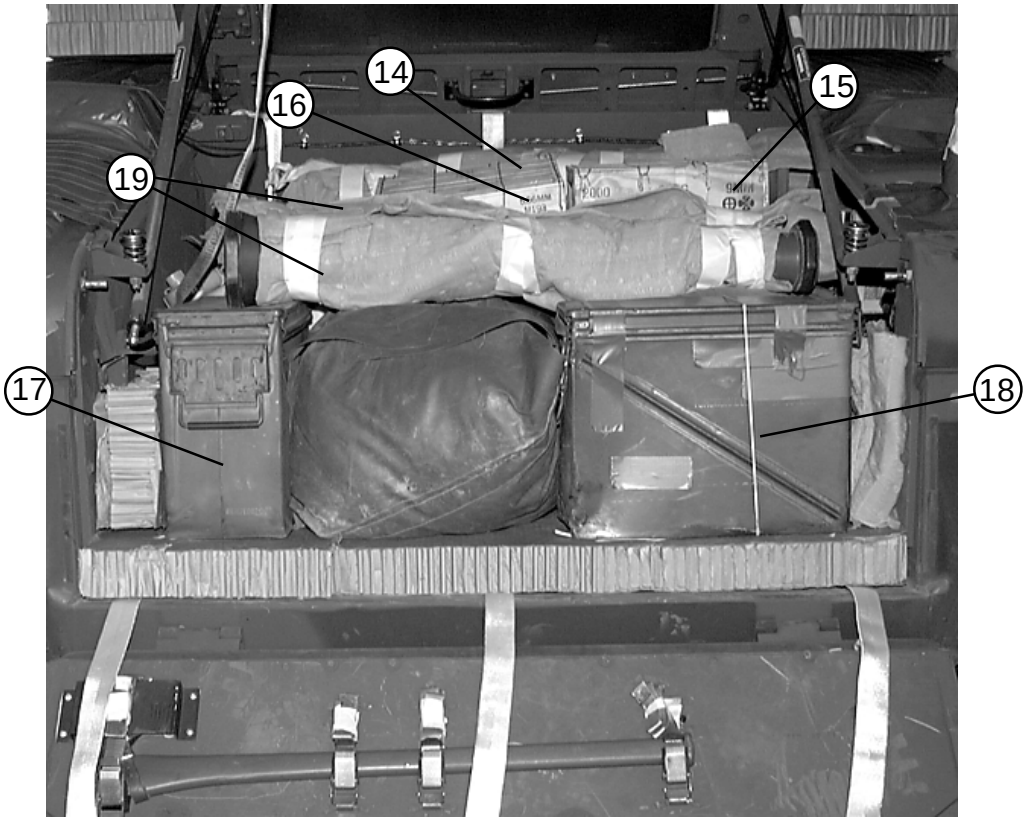

(14) Wrap all three AT4's with cellulose wadding and tape. Place the first AT4 over the route signing kit.

(15) Place a box of 9-mm ammunition over the team bag.

(16) Place a box of 5.56 ammunition over the LSS net bag.

(17) Place a can of 40-mm linked ammunition in the left rear.

(18) Place a can of 40-mm linked ammunition in the right rear.

(19) Place the two remaining AT4's over the 40-mm ammunition, team bag, and LSS bag.

Figure 4-24. Accompanying Load Stowed in Cargo Bed (continued)

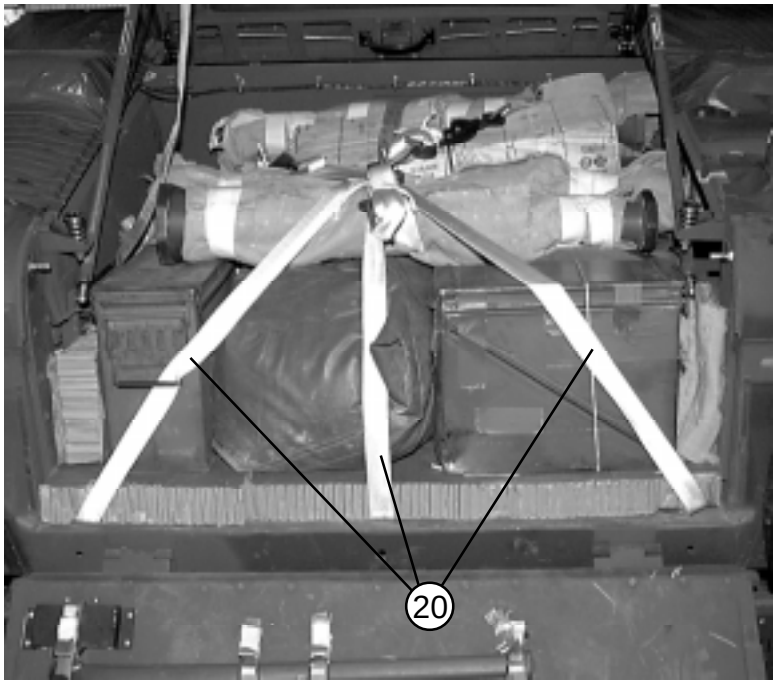

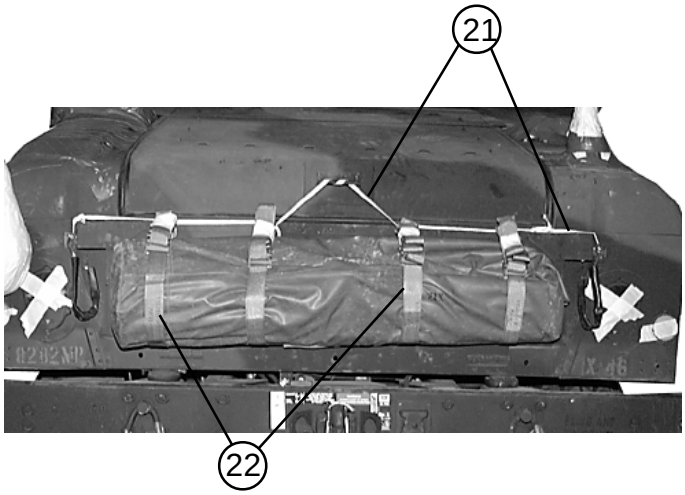

(20) Secure the three lashings placed in steps 1 through 3 over the load with D-rings and load binders. Pass the lashing through box handles where possible.

(21) Secure the tailgate shut with 1/2-inch tubular nylon webbing.

(22) Secure the LSS pole bag to the tailgate with the straps provided. Tape the loose strap ends.

Figure 4-24. Accompanying Load Stowed in Cargo Bed (continued)

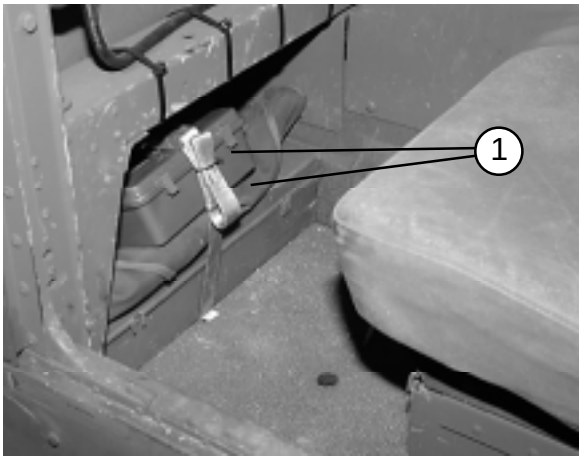

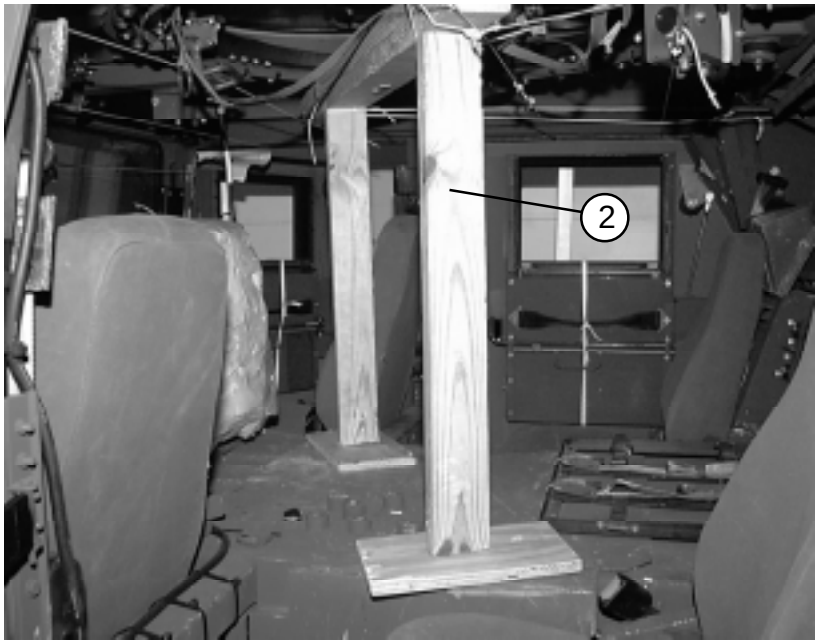

1. Place the warning triangle and the first aid kit behind the driver's seat and secure them with the strap provided.

2. Build the turret support according to Figure 3-2. Place the turret support under the turret across its diameter in a left rear to right front direction. Tie the support to convenient points on the turret with 1/2-inch tubular nylon webbing. Tie the turret brake in the DOWN position with type III nylon cord. Secure the three turret latches to holes in the turret ring with type III nylon cord.

Note: Figure 7-6 shows additional detail for securing the turret support.

Figure 4-25. Accompanying Load Stowed in Cab

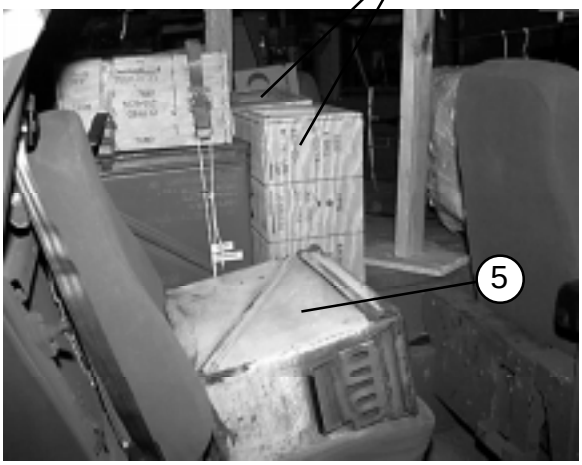

(3) Place three boxes of 40-mm linked ammunition in the space provided between the seats. Place two boxes of 5.56-mm ammunition on the 40-mm boxes. Secure the ammunition with the straps provided. Safety the strap fasteners with type III nylon cord.

(4) Place two 5.56-mm ammunition boxes in front of the ammunition placed in step 3.

(5) Place a box of 40-mm linked ammunition on the right rear passenger seat.

(6) Place the MOD60 kit to the left of the 5.56-mm ammunition boxes placed in step 4.

Figure 4-25. Accompanying Load Stowed in Cab (continued)

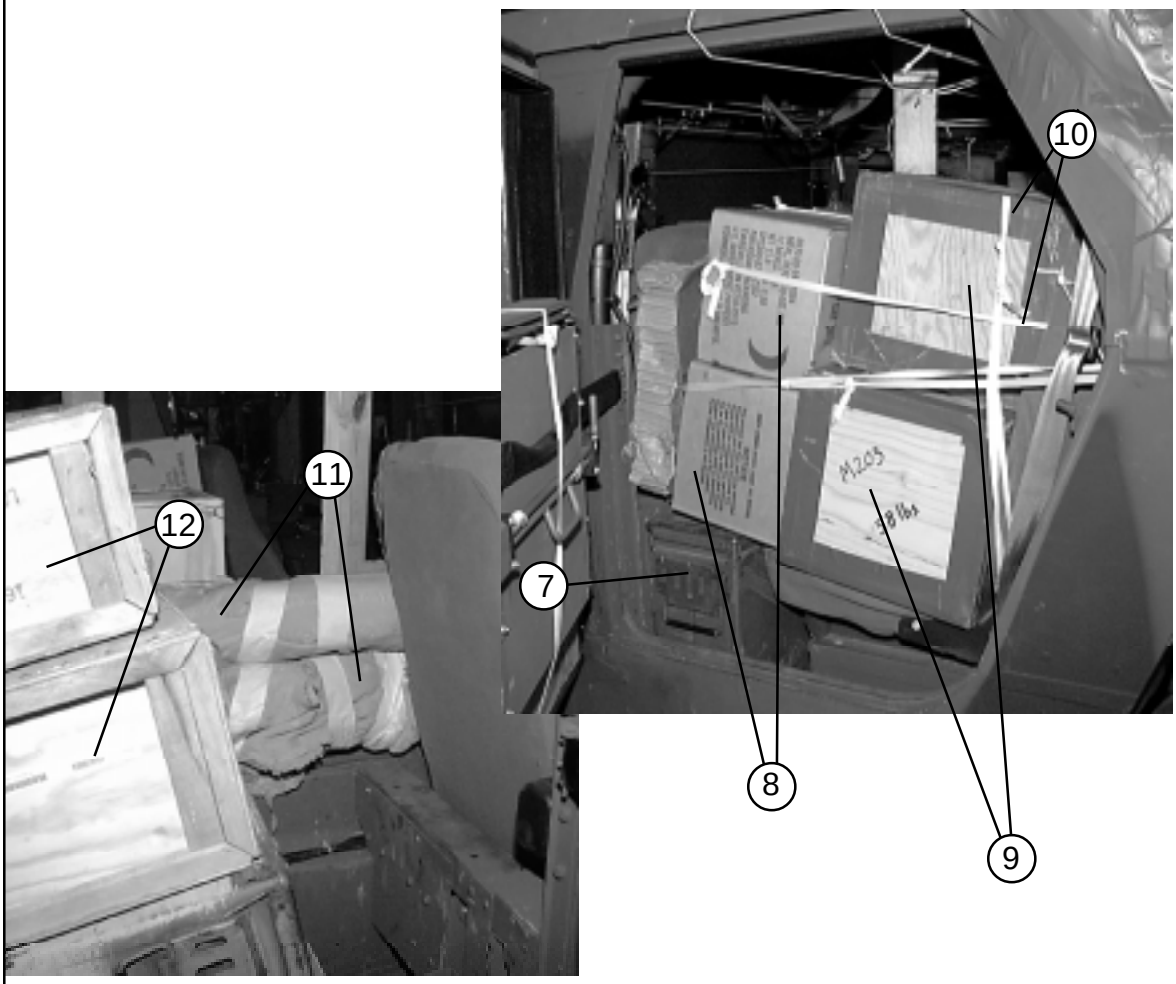

7 Place a box of 40-mm linked ammunition upright on the floor behind the driver's seat.

8 Set two boxes of MRE's on their sides over the 40-mm ammunition box.

9 Place a box of claymore mines and a box of M203 grenade rounds between the left rear seat back and the boxes placed in steps 7 and 8.

10 Tie the items placed in steps 7 through 9 to the seat back and to stationary points in the truck with 1/2-inch tubular nylon webbing. Place a piece of honeycomb between the driver's seat back and the tied items.

11 Wrap the Mark 19 grenade launcher, tripod, and fording stack with cellulose wadding and tape. Place them in the cab center between the passenger seats. Secure them to points near the floor with type III nylon cord.

12 Place two 5.56-mm ammunition boxes over the 40-mm ammunition box placed in step 5.

Figure 4-25. Accompanying Load Stowed in Cab (continued)

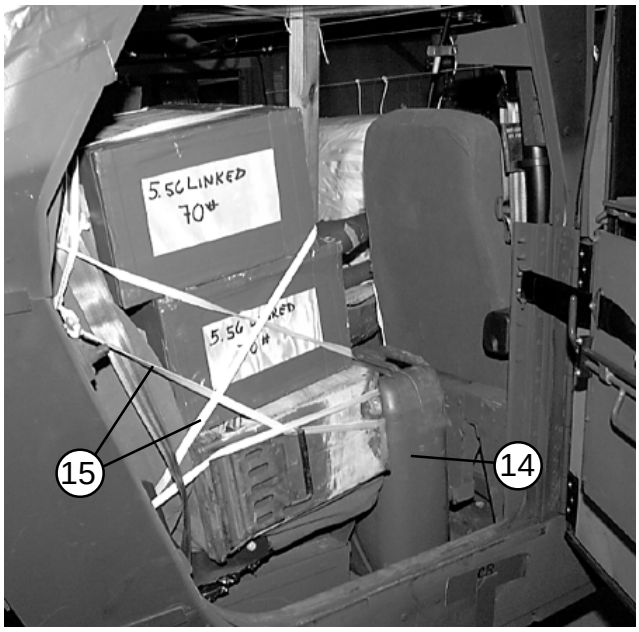

(13) Place a LVOSS unit and a chock block behind each rear seat. Wrap the LVOSS unit with cellulose wadding and tape. Secure them to the seat back with type III nylon webbing.

(14) Place and secure a water can on the floor behind the front passenger seat.

(15) Tie the ammunition boxes to the seat back and to stationary points with 1/2-inch tubular nylon webbing.

Figure 4-25. Accompanying Load Stowed in Cab (continued)

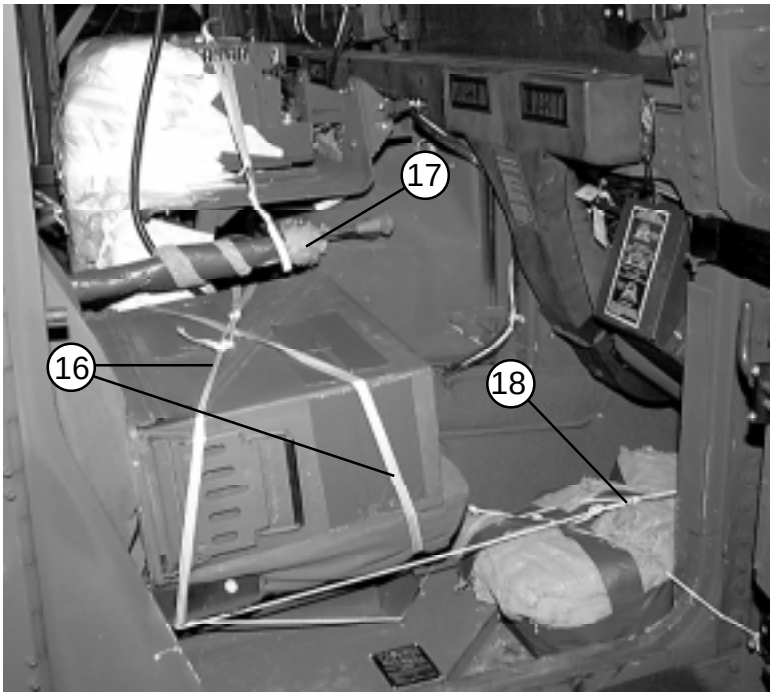

(16) Tie a box of 40-mm linked ammunition to the front passenger seat with 1/2-inch tubular nylon webbing.

(17) Wrap the antenna sections with cellulose wadding and tape. Tie the antenna sections to convenient points with 1/2-inch tubular nylon webbing.

(18) Pad the remaining LVOSS units with cellulose wadding and tape. Tie them in the front passenger footwell with 1/2-inch tubular nylon webbing.

Figure 4-25. Accompanying Load Stowed in Cab (continued)

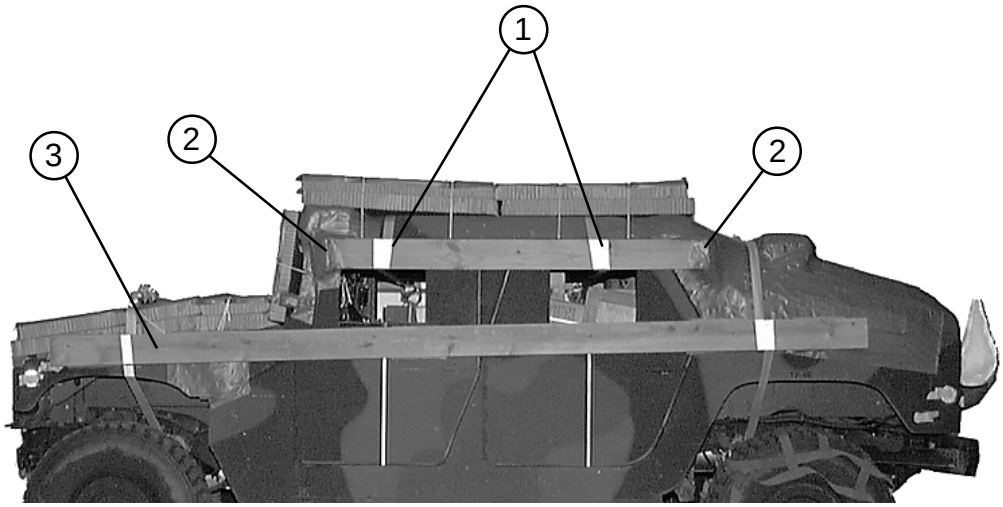

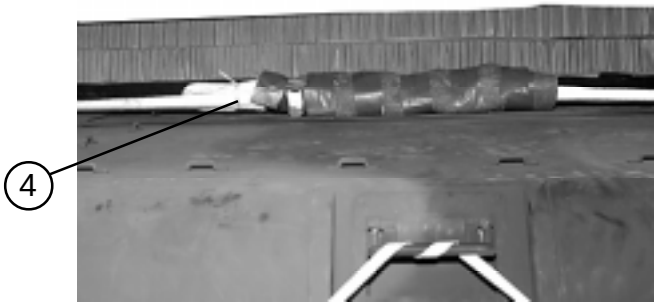

1. Cut a 45-degree bevel in each end of two 69 1/2- by 2- by 6-inch pieces of lumber. Hold the lumber even with the top of the window openings, with the beveled cuts facing outward. Extend the free ends of the lashings placed in Figure 4-24, step 12 down around the lumber, around the board once, and through the door openings. Secure the ends of the lashings to each other inside the truck.
2. Pad the ends of the gutter boards placed in step 1 above with felt and tape.
3. Make and install two body side protection boards according to Figure 2-13, steps 3 through 6.
4. Pad the load binder for the lashing over the rear of the truck with felt and tape.

Figure 4-26. Body Side Protection Boards Installed

LIFTING AND POSITIONING TRUCK, AND INSTALLING OPTIONAL DRIVE-OFF AIDS

4-20. Install the optional drive-off aids on the platform as shown in Figure 4-27. Install lifting slings on the truck as shown in Figure 2-16. Position the truck on the honeycomb stacks as shown in Figure 4-28. Install the drive-off aids, if used, to the rear wheels of the truck as shown in Figure 2-17.

LASHING TRUCK

4-21. Lash the truck to the platform with fifteen 15-foot tie-down assemblies as shown in Figures 4-29 and 4-30, and according to FM 4-20.102/NAVSEA SS400-AB-MMO-010/TO 13C7-1-5.

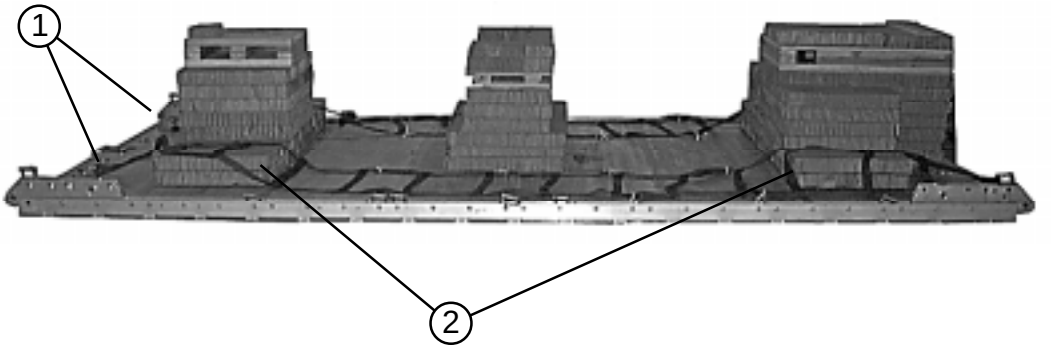

1. Attach the looped end of each drive-off aid to the outside rear tie-down ring on the last platform panel with a type V clevis assembly.
2. Extend the drive-off aids to the front of the platform, passing them over the base layers of stacks 1 and 3. Secure the drive-off aids to adjacent platform busings and tie-down rings with type I, 1/4-inch cotton webbing.

Figure 4-27. Drive-off Aids Installed on Platform

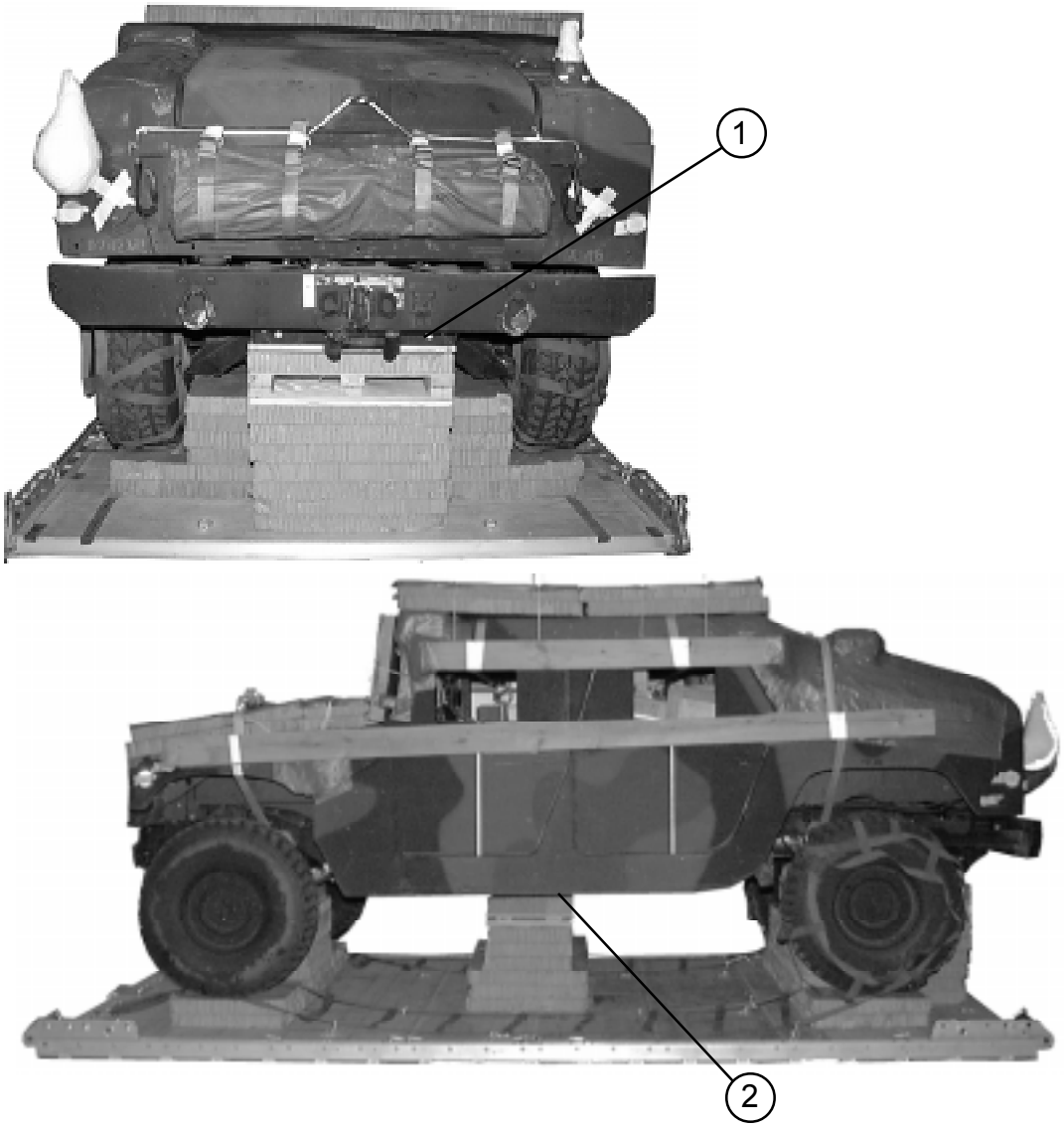

1 Be sure that the suspension cross members of the truck rest securely on stacks 1 and 3.

2 Be sure that frame cross member rests securely on the 6-inch part of the honeycomb at the front of stack 2.

Figure 4-28. Truck Positioned on Platform and Drive-Off Aids Installed

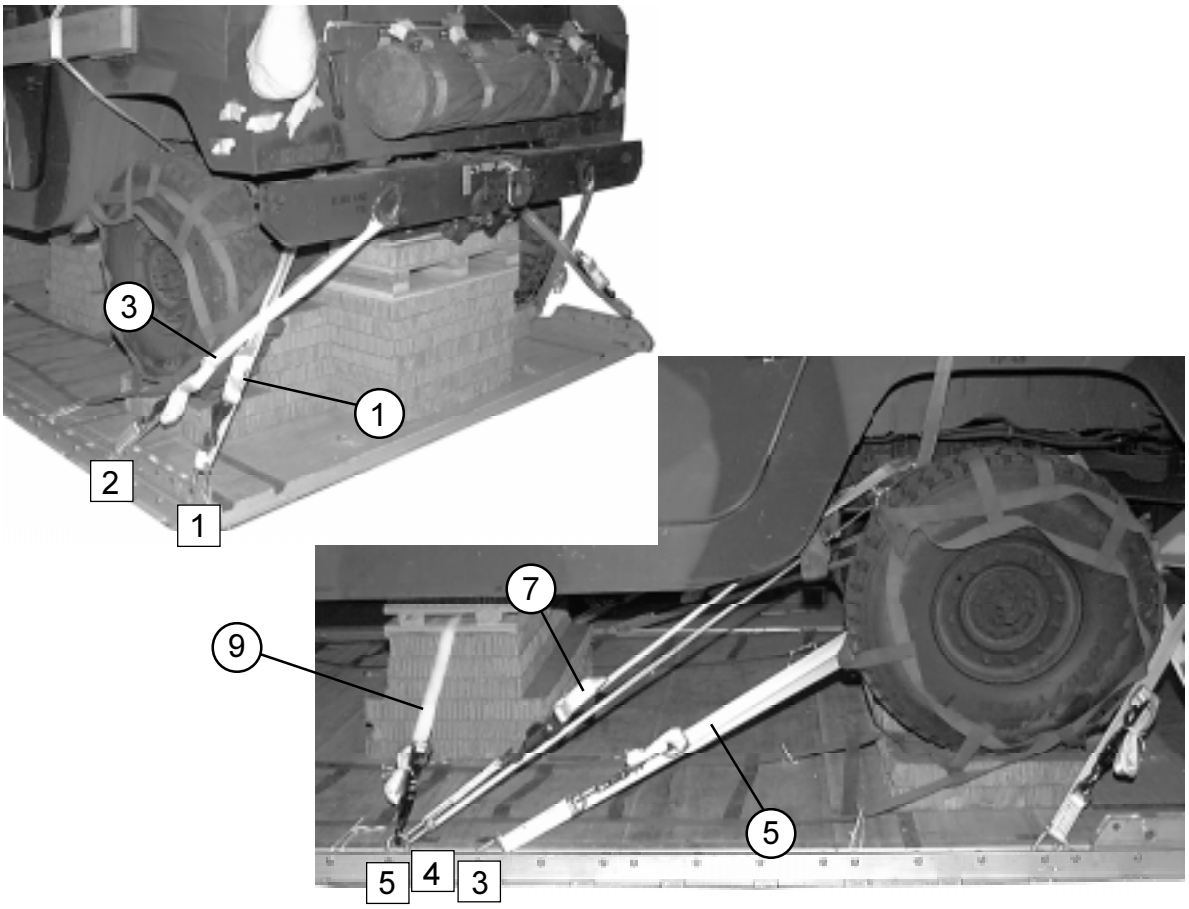

Lashing Number	Tie-down Clevis Number	Instructions
		Pass lashing:
1	1	Through tie-down bracket behind left rear coil spring.
2	1A	Through tie-down bracket behind right rear coil spring.
3	2	Through left rear lifting shackle.
4	2A	Through right rear lifting shackle.
5	3	Around left rear lower control arm.
6	3A	Around right rear lower control arm.
7	4	Through tie-down bracket in front of left rear coil spring.
8	4A	Through tie-down bracket in front of right rear coil spring.
9	5 and 5A	Pass a 15-foot lashing through clevis 5A and through its own D-ring. Pass the lashing through the hole in stack 2. Attach the lashing to clevis 5 with a load binder.

Figure 4-29. Lashings 1 Through 9 Installed

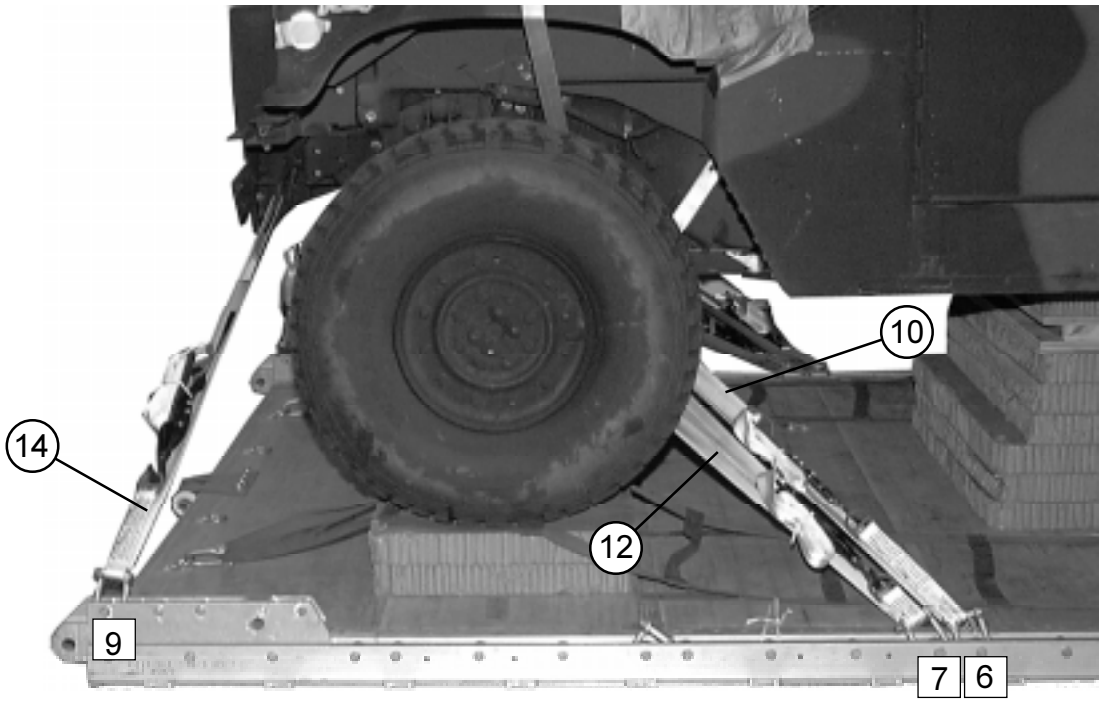

Lashing Number	**Tie-down** Clevis Number	**Instructions**
		Pass lashing:
10	6	Through tie-down bracket behind left front coil spring.
11	6A	Through tie-down bracket behind right front coil spring.
12	7	Around left lower control arm.
13	7A	Around right lower control arm.
14	9	Through tie-down bracket on end of left frame rail.
15	9A	Through tie-down bracket on end of right frame rail.

Figure 4-30. Lashings 10 Through 15 Installed

INSTALLING AND SAFETY TYING SUSPENSION SLINGS

4-22. Install, pad and safety tie four 16-foot (4-loop), type XXVI nylon suspension slings as shown in Figure 4-31.

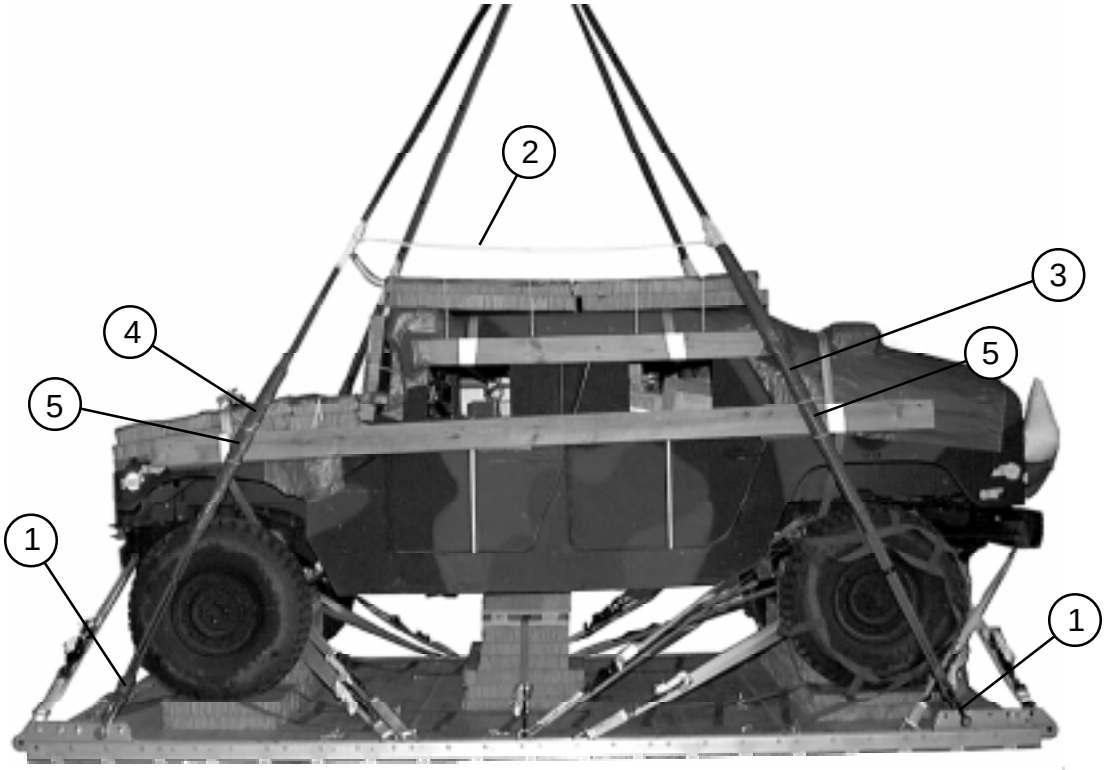

1. Attach a 16-foot (4-loop), type XXVI nylon suspension sling to each tandem link with a large clevis.
2. Raise the slings and install the deadman's tie 6 to 8 inches above the load.
3. Position a 6- by 60-inch piece of felt around each front suspension sling 33 inches from the suspension clevis. Cover the padding completely with tape, extending the tape 6 inches above and below the padding.
4. Position a 6- by 36-inch piece of felt around each rear suspension sling 31 inches from the suspension clevis. Secure the padding as described in step 3 above.
5. Secure the suspension slings to the body side boards with type III nylon cord.

Figure 4-31. Suspension Slings Installed, Padded and Safety Tied

STOWING CARGO PARACHUTES

4-23. Stow and restrain three G-11 cargo parachutes on the load according to FM 4-20.102/NAVSEA SS400-AB-MMO-010/TO 13C7-1-5, and as shown in Figure 4-32.

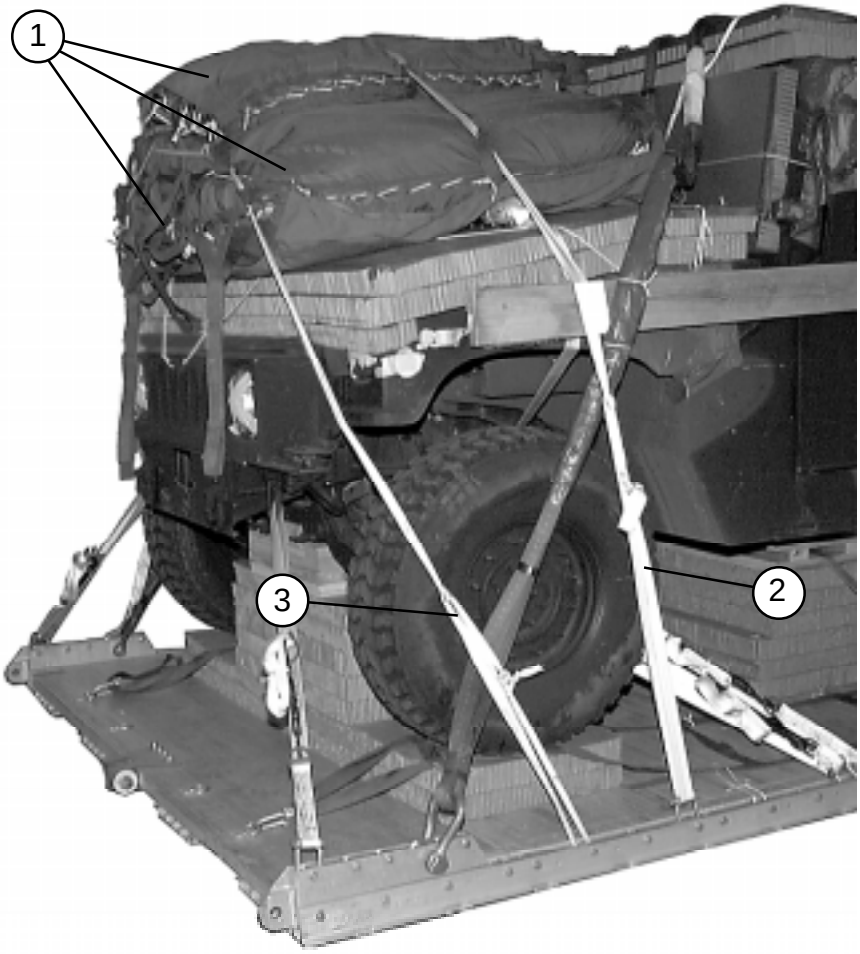

1. Place and cluster three G-11 cargo parachutes on the honeycomb over the truck hood according to FM 4-20.102/NAVSEA SS400-AB-MMO-010/TO 13C7-1-5.
2. Tie the front restraint straps to clevises 8 and 8A.
3. Tie the rear restraint straps to the 27th bushings on each side of the platform.

Figure 4-32. Cargo Parachutes Installed

INSTALLING PARACHUTE RELEASE

4-24. Prepare and install an M-2 cargo parachute release according to FM 4-20.102/NAVSEA SS400-AB-MMO-010/TO 13C7-1-5, and as shown in Figure 4-33 .

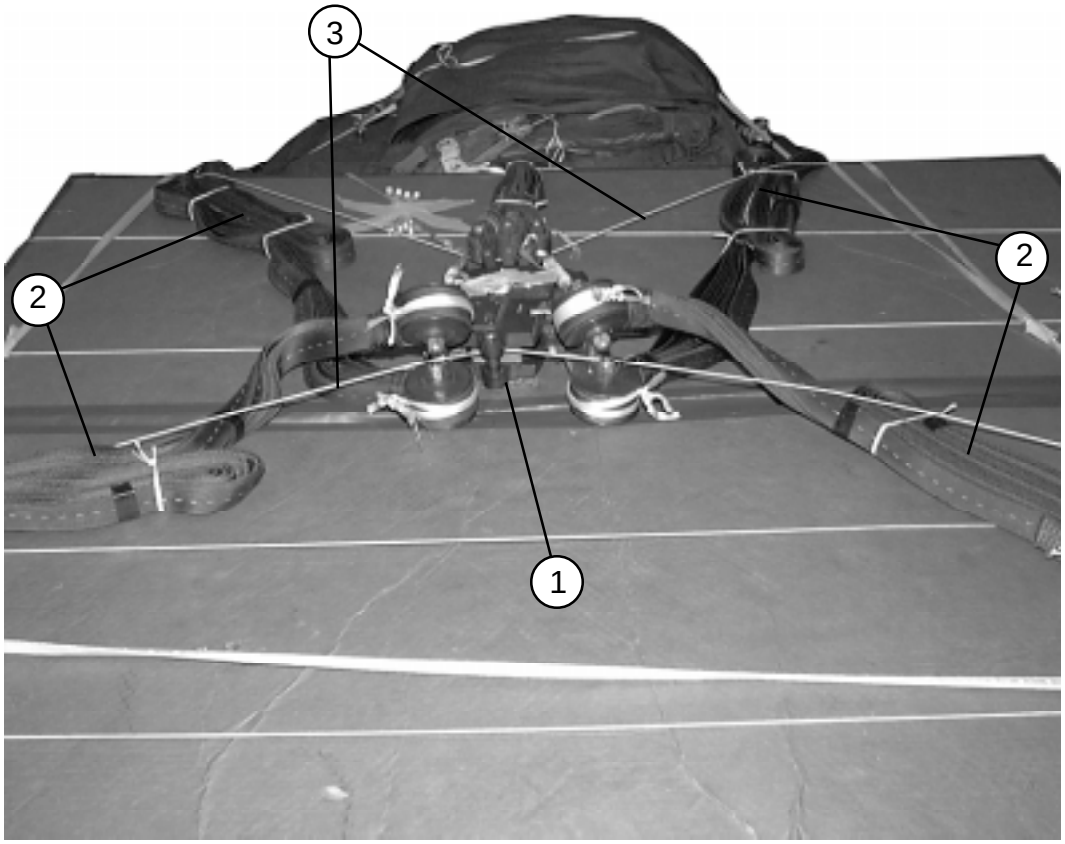

Note: The M-2 cargo parachute release is used on this load to accommodate the 4-loop suspension slings.

1. Place the M-2 release on the roof honeycomb in front of the parachutes.
2. S-fold the slack in the suspension slings. Tie the folds with type I, 1/4-inch cotton webbing.
3. Attach the suspension slings and the riser extensions to the release. Tie the release to convenient points on the load with type III nylon cord.

Figure 4-33. M-2 Release Installed

INSTALLING EXTRACTION SYSTEM

4-25. Install the EFTC extraction system according to FM 4-20.102/NAVSEA SS400-AB-MMO-010/TO 13C7-1-5, and as shown in Figure 4-34.

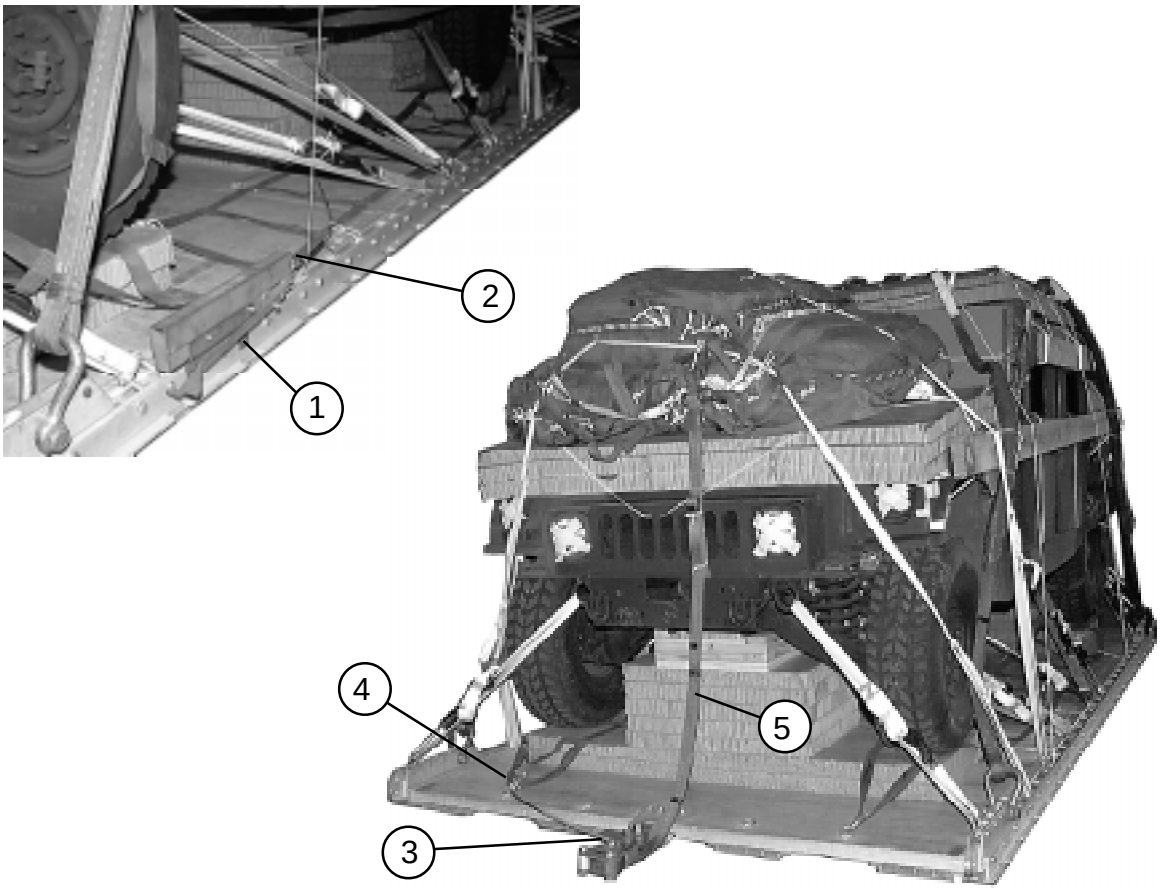

1. Install the EFTC actuator mounting brackets in the front mounting holes in the left platform rail.
2. Attach a 16-foot release cable to the actuator. Install the actuator to the EFTC actuator mounting brackets.
3. Install the latch assembly to the extraction bracket. Attach the release cable to the latch assembly.
4. Tie the release cable to tie-down ring D8 on the rear platform panel with a length of type I, 1/4-inch cotton webbing.
5. Install a 9-foot (2-loop), type XXVI nylon webbing deployment line on the load.

Figure 4-34. EFTC Installed

INSTALLING PROVISIONS FOR EMERGENCY RESTRAINTS

4-26. Install provisions for emergency restraints according to FM 4-20.102/ NAVSEA SS400-AB-MMO-010/TO 13C7-1-5.

PLACING EXTRACTION PARACHUTE

4-27. Select the extraction parachute and extraction line needed, using the extraction line requirements table in FM 4-20.102/NAVSEA SS400-AB-MMO-010/TO 13C7-1-5. Rig the extractionline in a line bag according to TM 10-1670-286-20/TO 13C5-2-41. Place the extraction parachute and extraction line on the load for installation in the aircraft.

MARKING RIGGED LOAD

4-28. Mark the rigged load according to FM 4-20.102/NAVSEA SS400-AB-MMO-010/TO 13C7-1-5, and as shown in Figure 4-35. Complete Shipper's Declaration for Dangerous Goods according to AFJMAN 24-204/TM 38-250. If the load varies from the one shown, the weight, height, CB, and parachute requirements must be recomputed.

EQUIPMENT REQUIRED

4-29. Use the equipment listed in Table 4-2 to rig this load.

CAUTION
Make the final rigger inspection required by FM 4-20.102/ NAVSEA SS400-AB-MMO-010/TO 13C7-1-5 before the load leaves the rigging site.

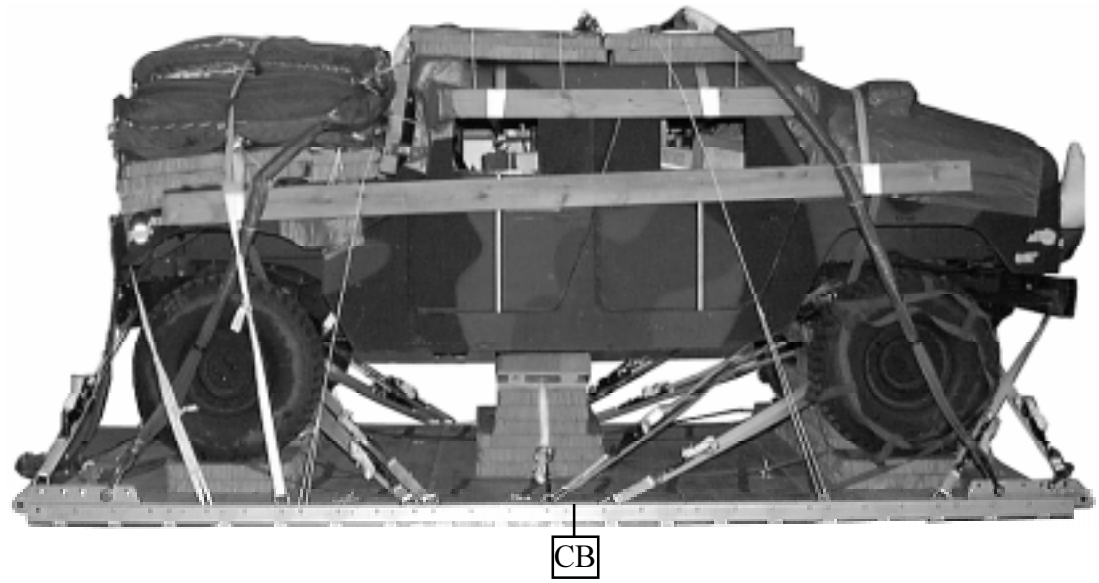

RIGGED LOAD DATA

Weight: Load shown	15,240 pounds
Maximum load allowed...	15,240 pounds
Height (with three G-11B parachutes)	98 inches
Width	108 inches
Length (overall)	210 inches
Overhang: Front	0 inches
Rear (EFTC)	18 inches
CB (from front edge of platform)	92 inches

Figure 4-35. M1114 Up-Armored Armament Carrier Rigged for Low-Velocity Airdrop

Table 4-2. Equipment Required for Rigging the M1114 Up-Armored Armament Carrier for Low-Velocity Airdrop

National Stock Number	Item	Quantity
8040-00-273-8713	Adhesive, paste, 1-gal	As required
4030-00-090-5354	Clevis, suspension, 1-in (large)	5
4020-00-240-2146	Cord, nylon, type III, 550-lb	As required
1670-00-434-5785	Coupling assembly, airdrop, extraction force transfer with cable, 16-ft	1
1670-00-360-0328	Cover, clevis, large	1
8135-00-664-6958	Cushioning material, packaging, cellulose wadding	As required
8305-00-958-3685	Felt, 1/2-in thick	As required
1670-01-183-2678	Leaf, extraction line (line bag)	2
1670-01-035-6054	Bridle, extraction line bag (for C-17)	1
	Line, drogue (for C-17)	
1670-01-064-4452	60-ft (1-loop), type XXVI	1
	Line, extraction:	
1670-01-062-6313	For C-130: 60-ft (3-loop), type XXVI	1
1670-01-107-7651	For C-141: 140-ft (3-loop), type XXVI	1
	For C-5:	
1670-01-062-6313	60-ft (3-loop), type XXVI and	1
1670-01-107-7651	140-ft (3-loop), type XXVI	1
	For C-17:	
1670-01-107-7651	140-ft (3-loop), type XXVI	1
	Link assembly, Two-point:	1
5306-00-435-8994	Bolt, 1-in diam, 4-in long	(2)
5310-00-232-5165	Nut, 1-in, hexagonal	(2)
1670-00-003-1953	Plate, side, 3 3/4-in	(2)
5365-00-007-3414	Spacer, large	(2)
	Lumber:	
5510-00-220-6146	2- by 4-in	As required
5510-00-220-6448	2- by 6-in	As required
5510-00-220-6274	4- by 4-in	As required
5315-00-010-4659	Nail, steel wire, 8d	As required

Table 4-2. Equipment Required for Rigging the M1114 Up-Armored Armament Carrier for Low-Velocity Airdrop (continued)

National Stock Number	Item	Quantity
1670-00-753-3928	Pad, energy-dissipating (honeycomb)	
	3- by 36- by 96-in	13 sheets
	Parachute:	
	Cargo:	
1670-01-016-7841	G-11B	3
	Cargo extraction:	
1670-01-063-3716	22-ft (for C-17 aircraft, use H-block with this parachute)	1
	Drogue (for C-17)	
1670-01-063-3715	15-ft	1
	Platform, airdrop, type V, 16-ft	
1670-01-353-8425	Bracket assembly, EFTC	(1)
1670-01-162-2372	Clevis assembly, type V	(20)
1670-01-353-8424	Bracket assembly, extraction	(1)
1670-01-162-2381	Tandem link assembly (Multipurpose link)	(4)
5530-00-128-4981	Plywood, 3/4-in	5 sheets
1670-01-097-8817	Release, cargo parachute, M-2	1
	Sling, cargo, airdrop	
	For suspension:	
1670-01-062-6308	16-ft 4-loop), type XXVI nylon webbing	4
	For lifting:	
1670-01-062-6304	9-ft (2-loop), type XXVI nylon webbing	2
1670-01-062-6303	12-ft (2-loop), type XXVI nylon webbing	2
	For deployment:	
1670-01-062-6304	9-ft (2-loop), type XXVI nylon webbing	1
	For riser extension:	
1670-01-062-6313	60-ft (3-loop), type XXVI nylon webbing	3
5340-00-040-8219	Strap, parachute release, multi-cut, comes w/ 3 knives	2
7510-00-266-5016	Tape, adhesive, 2-in	As required
1670-00-937-0271	Tie-down assembly, 15-foot	28
1670-01-344-0825	Vehicle drive-off aid	1
	Webbing:	
8305-00-268-2411	Cotton, 1/4-in, type I	As required
8305-00-082-5752	Nylon, tubular, 1/2-in	As required
8305-00-263-3591	Type VIII	As required

CHAPTER 5

RIGGING SPECIFIC ACCOMPANYING LOADS IN HMMWV-SERIES TRUCKS

DESCRIPTION OF LOADS

5-1. This chapter tells and shows how to rig specific items of Army equipment in the cargo bodies of HMMWV-series trucks. All trucks on 16-foot and 20-foot platforms must be rigged with a load in the truck. See the chapter or section for the particular truck for the minimum and maximum allowable load weights. If a specific piece of equipment is lighter than the minimum specified weight, additional items must be rigged to meet the minimum weight requirement.

Since loads in actual tactical situations vary greatly, and equipment changes rapidly, use these procedures as guides for rigging similar items.

The loads shown in this chapter can be rigged in trucks of similar configuration and load capacity, unless the procedures specify that the load can be rigged in only one model of truck. Consult the chapter or section for the truck shown to find alternative truck models that can be used to rig the load.

CAUTION

Only ammunition listed in FM 10-500-53/MCRP 4-3.81/TO 13C7-18-41 may be airdropped. Package, mark, andlabel hazardous material according to AFJMAN 24-204/TM 38-250.

RIGGING TACCS, AMMUNITION, AND TRUCK EQUIPMENT IN M998 AND M1039 CARGO/TROOP CARRIERS

5-2. Use the procedures in Figure 5-1 to stow the TACCS (Tactical Army Combat Service Support Computer System), six boxes of 20-mm ammunition, and truck equipment. The accompanying load shown weighs 990 pounds.

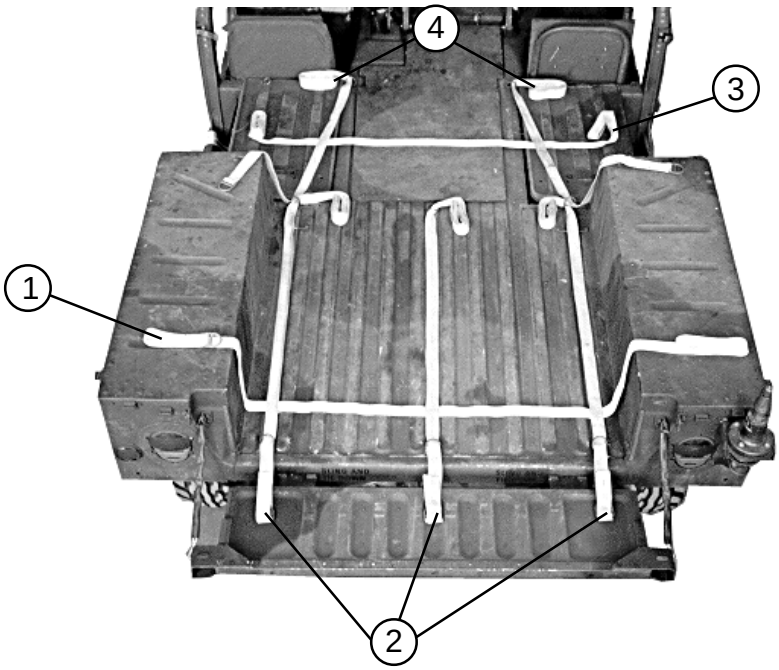

1. Place a 15-foot lashing across the cargo bed 10 inches from its rear edge.
2. Pass three 15-foot lashings through the rear and center tie-down rings in the cargo bed.
3. Place a 15-foot lashing across the cargo bed 14 inches from the seat backs.
4. Pass a 15-foot lashing through the center and front tie-down rings on both sides.

Figure 5-1. TACCS, Ammunition, and Truck Equipment Rigged in Cargo/Troop Carrier

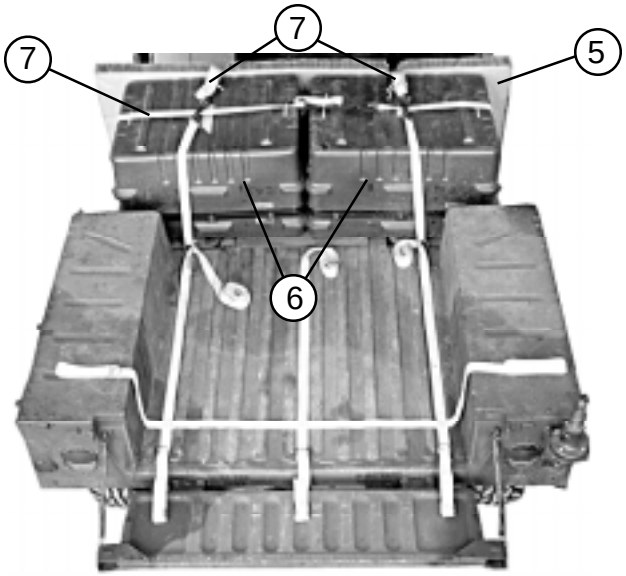

5 Place a 22- by 82-inch piece of honeycomb flush against the seat backs.

6 Place the logic module and terminal cases side by side against the honeycomb.

7 Secure the lashings placed in steps 3 and 4 with D-rings and load binders.

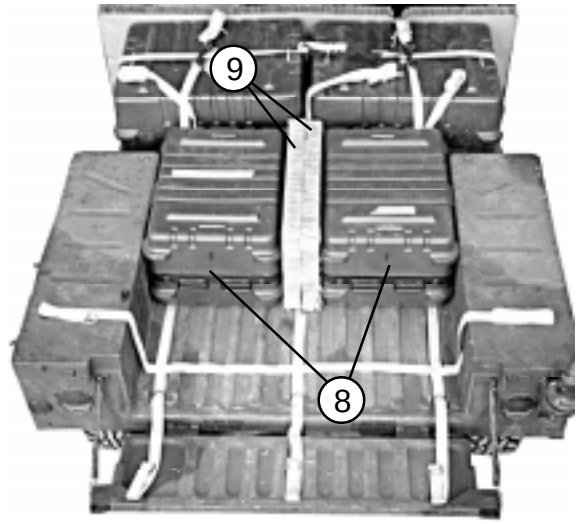

8 Place the keyboard and printer cases against the components placed in step 6 above.

9 Place two pieces of 18- by 32-inch honeycomb between the keyboard and printer cases.

Figure 5-1. TACCS, Ammunition, and Truck Equipment Rigged in Cargo/Troop Carrier (continued)

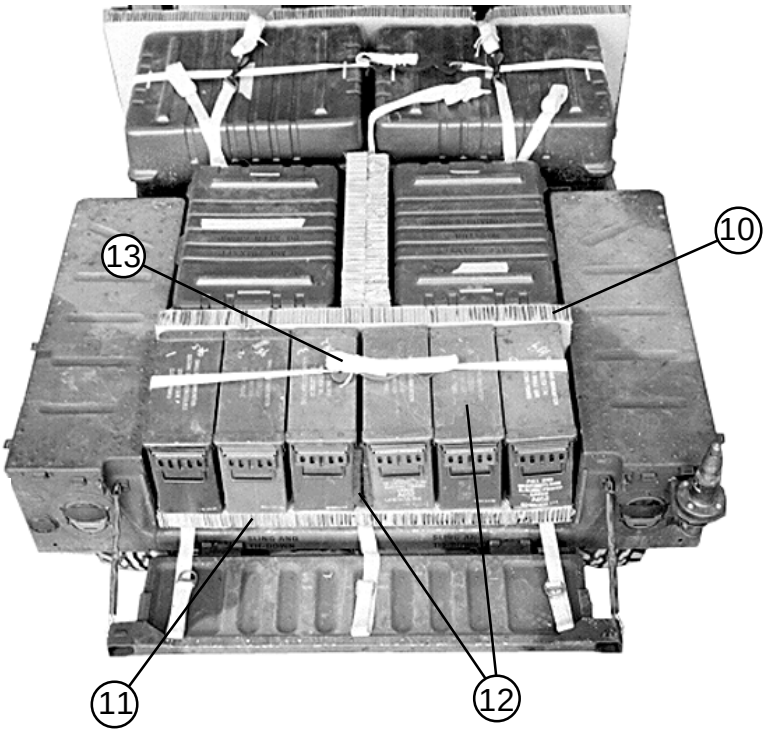

(10) Place an 18- by 52-inch piece of honeycomb against the keyboard and printer boxes.

(11) Place an 18- by 52-inch piece of honeycomb on the cargo bed floor.

(12) Place six boxes of 20-mm ammunition on the honeycomb. Place two pieces of 1/2- by 15- by 19-inch felt between the third and fourth boxes.

(13) Bind the boxes together with the lashing placed in step 1.

Figure 5-1. TACCS, Ammunition, and Truck Equipment Rigged in Cargo/Troop Carrier (continued)

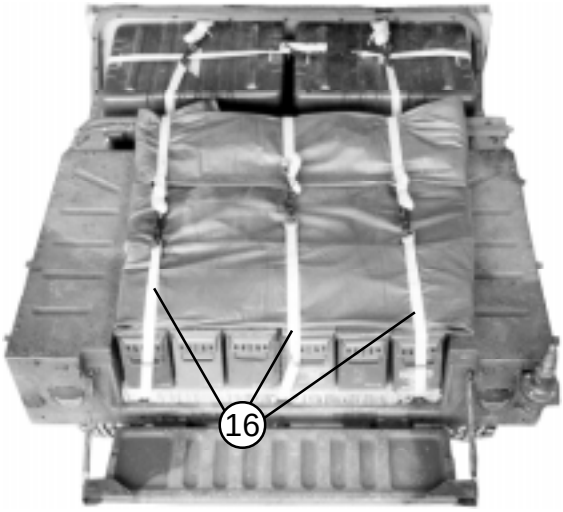

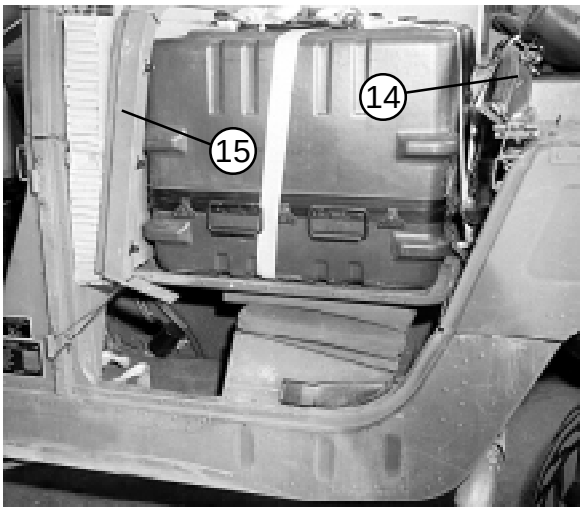

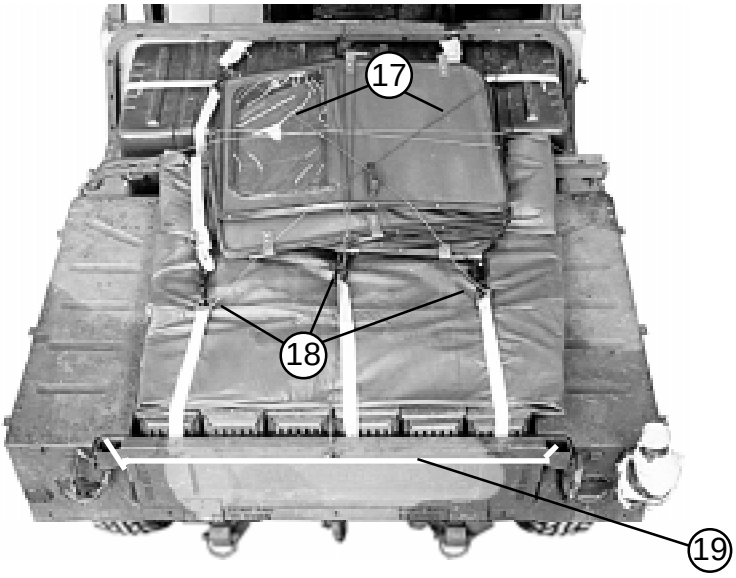

(14) Place the tarpaulin supports between the two sets of boxes.

(15) Place the roof support of four-door trucks against the honeycomb placed in step 5. Secure it to the B-pillar with type III nylon cord.

(16) Fold the tarpaulin over the ammunition, keyboard, and printer boxes. Run the lashings placed in step 2 through the nearest ammunition box handles, and over the tarpaulin supports in the front. Secure the lashings over the tarpaulin with D-rings and load binders.

(17) Tie the truck doors together with type III nylon cord and place them on the tarpaulin.

(18) Secure the doors to the lashing D-rings and other convenient points with type III nylon cord.

(19) Close the tailgate and secure it with 1/2-inch tubular nylon webbing.

Figure 5-1. TACCS, Ammunition, and Truck Equipment Rigged in Cargo/Troop Carrier (continued)

RIGGING AN/TVQ/2 GROUND/VEHICLE LASER LOCATOR DESIGNATOR (G/VLLD)IN M966 TOW CARRIER

5-3. Use the procedures in Figure 5-2 to stow the G/VLLD, its accompanying equipment, camouflage net and poles, antenna, fuel can, and water can. This accompanying load weighs 801 pounds.

Note: Make sure the unit owning the truck has installed the deck tie-down rings.

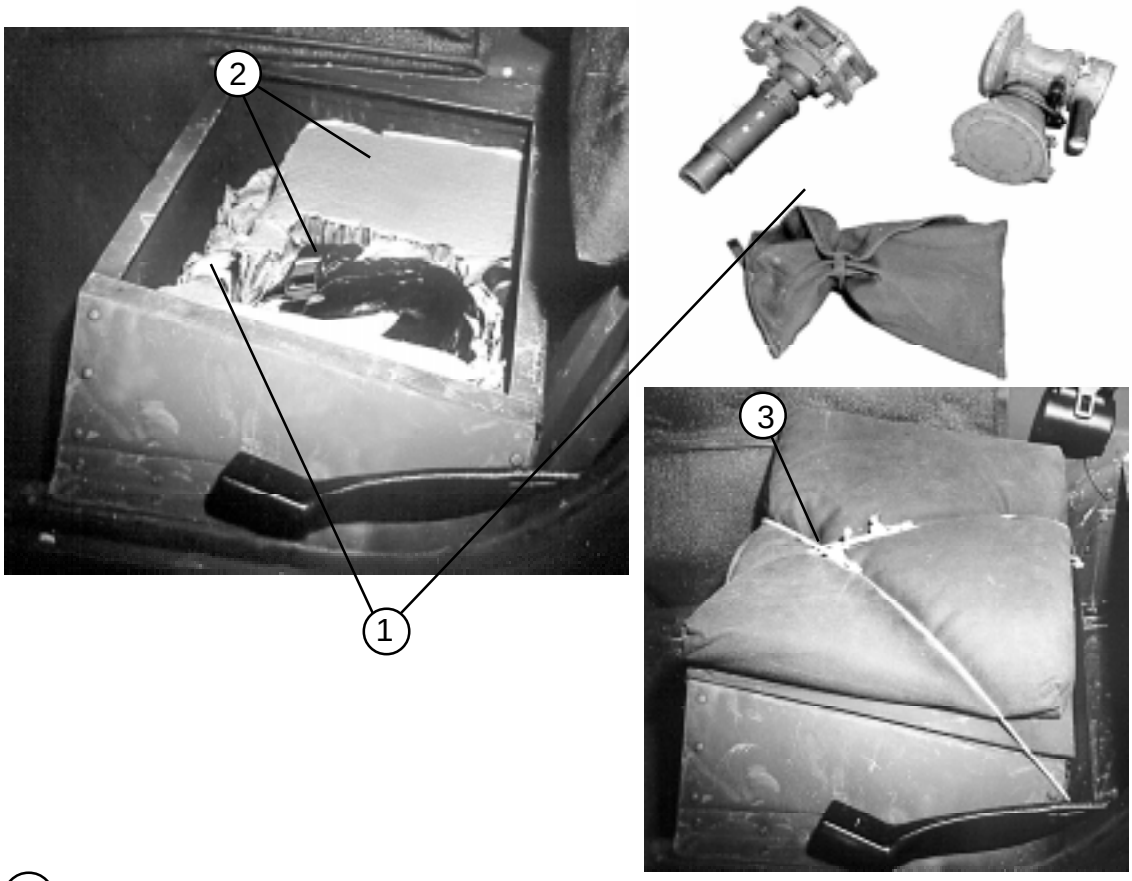

1. Pad the two sections of the traversing unit assembly and any other small objects with cellulose wadding. Place them in the storage areas under the rear seat cushions.
2. Secure the stowed equipment with the straps provided. Fill empty areas with honeycomb.
3. Tie the seat cushions over the storage areas with type III nylon cord.

Figure 5-2. G/VLLD and Accompanying Equipment Rigged in M966 Truck

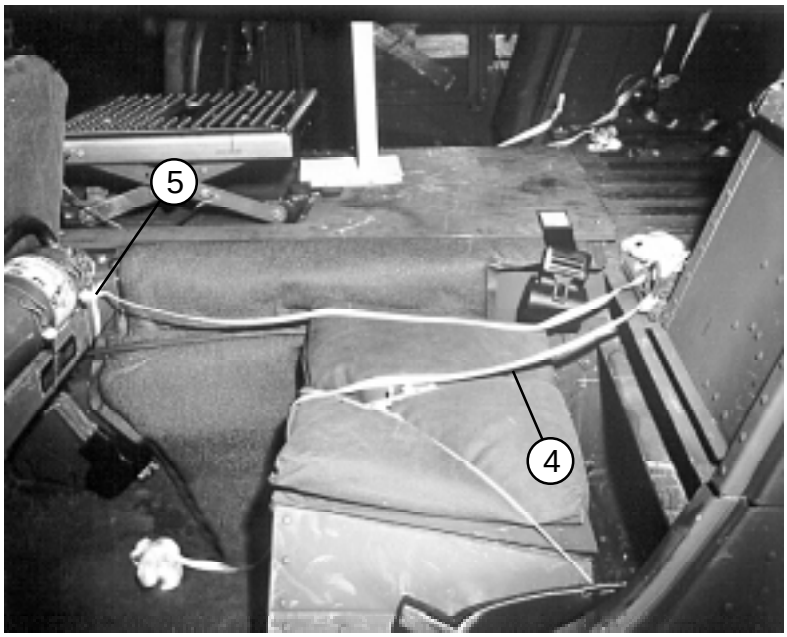

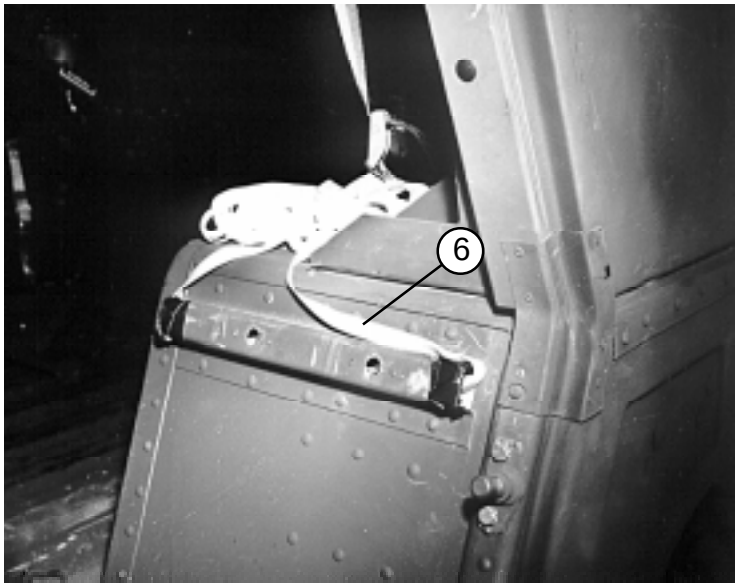

(4) Tie an 8-foot length of 1/2-inch tubular nylon webbing to the deck ring behind each rear seat with two half hitches.

(5) Tie an 8-foot length of 1/2-inch tubular nylon webbing to the frame behind each rear set with two half hitches.

(6) Tie an 8-foot length of 1/2-inch tubular nylon webbing through each rear seat support. Tape the ends of the seat supports.

Figure 5-2. G/VLLD and Accompanying Equipment Rigged in M966 Truck (continued)

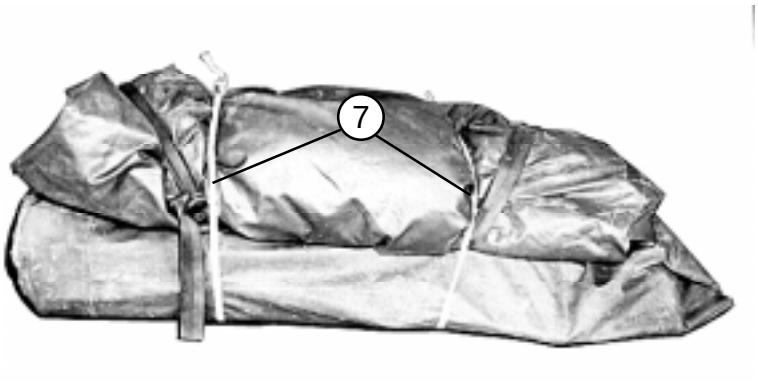

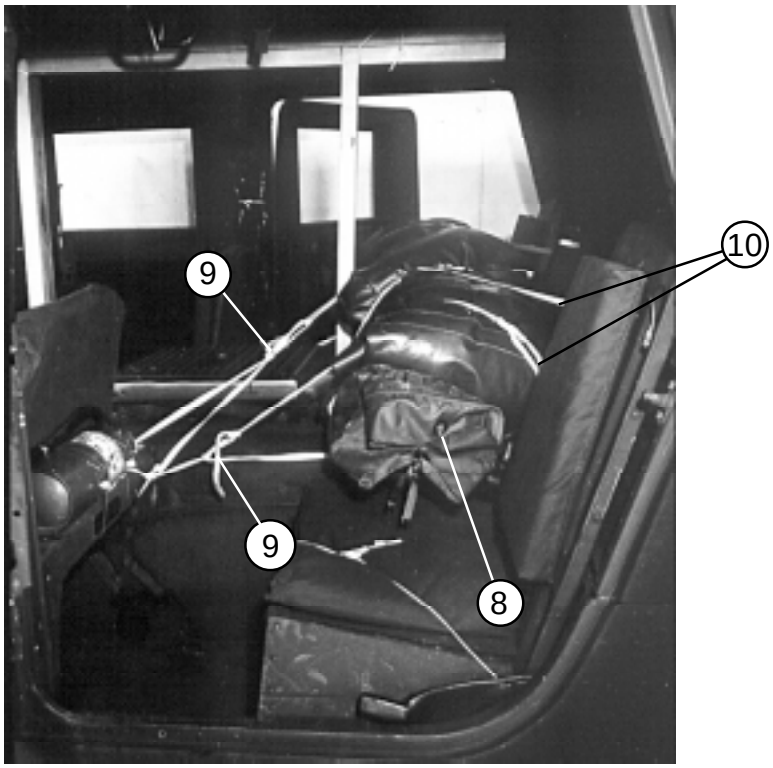

7 Tie the camouflage net and net pole bags together with two lengths of 1/2-inch tubular nylon webbing.

8 Raise the back seats and place the bags across the seats.

9 Bring each nylon tie placed in steps 4 and 5 around the bags, and tie each to itself with a trucker's hitch.

10 Bring each length of nylon webbing placed in step 6 over the bags, and tie them to the frame behind the front seat on the opposite side.

Figure 5-2. G/VLLD and Accompanying Equipment Rigged in M966 Truck (continued)

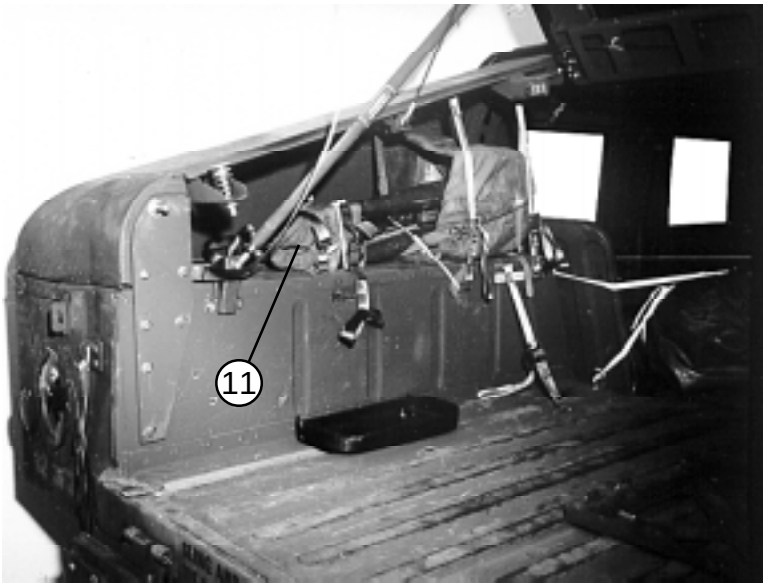

(11) Put the tripod in its case, and secure the case on the left rear shelf with the straps provided. Safety the tripod case to the strap brackets with type III nylon cord.

(12) Stow the night sight, bore sight, battery power conditioner, and spare batteries in their compartments with the straps provided.

(13) Pad a filled fuel can with cellulose wadding, and tape the cellulose wadding in place. Secure the fuel can in its bracket with the strap provided. Secure a water can with the strap provided. Safety tie both cans with type III nylon cord.

Figure 5-2. G/VLLD and Accompanying Equipment Rigged in M966 Truck (continued)

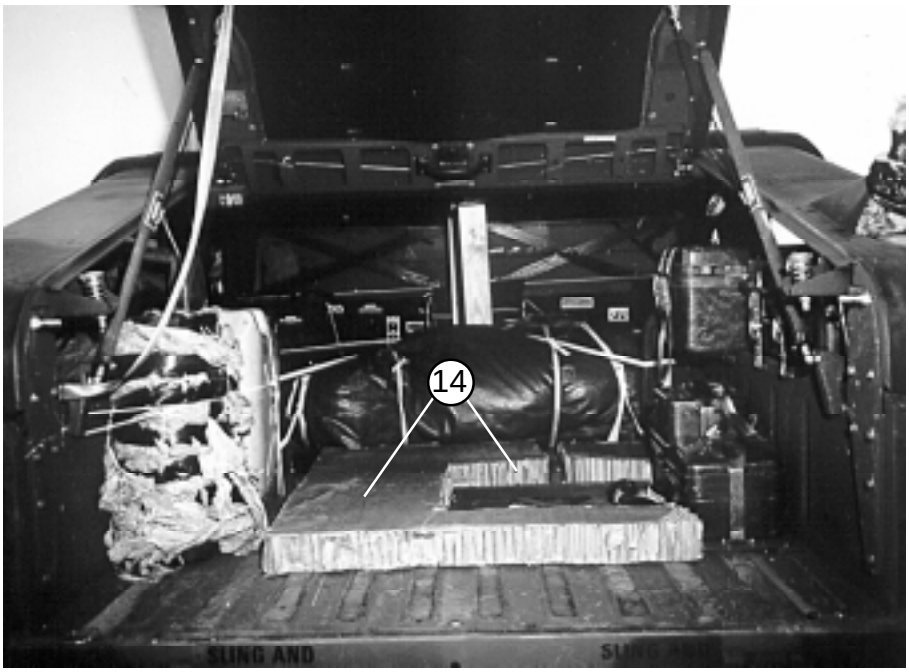

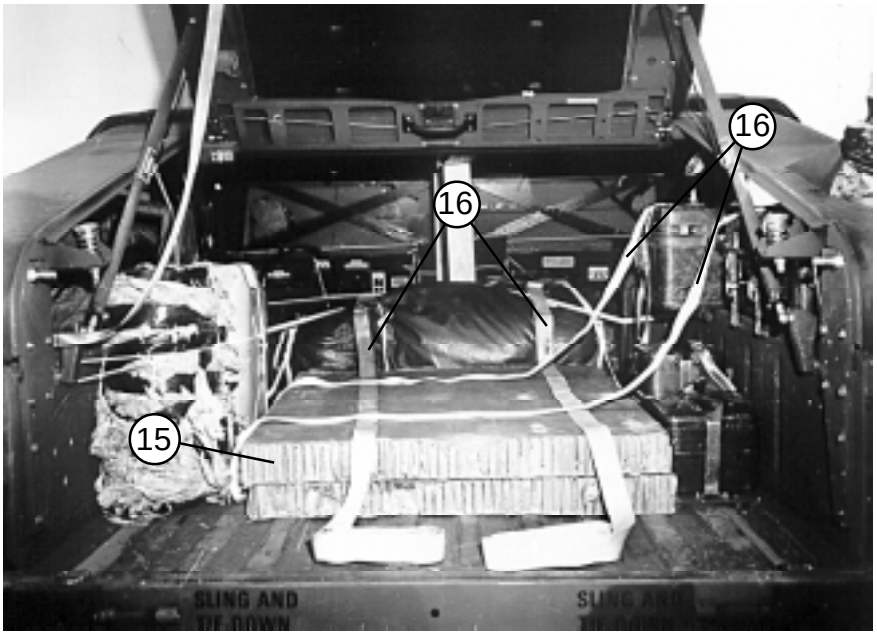

(14) Make cutouts in a 31 1/2- by 35-inch piece of honeycomb to fit the fixtures on the floor. Fit a 9 1/2- by 10 1/2-inch piece of honeycomb in the front right.

(15) Place a 31 1/2- by 35-inch piece of honeycomb over the honeycomb placed in step 14 above.

(16) Place two 15-foot lashings vertically and two 15-foot lashings horizontally on top of the honeycomb.

Figure 5-2. G/VLLD and Accompanying Equipment Rigged in M966 Truck (continued)

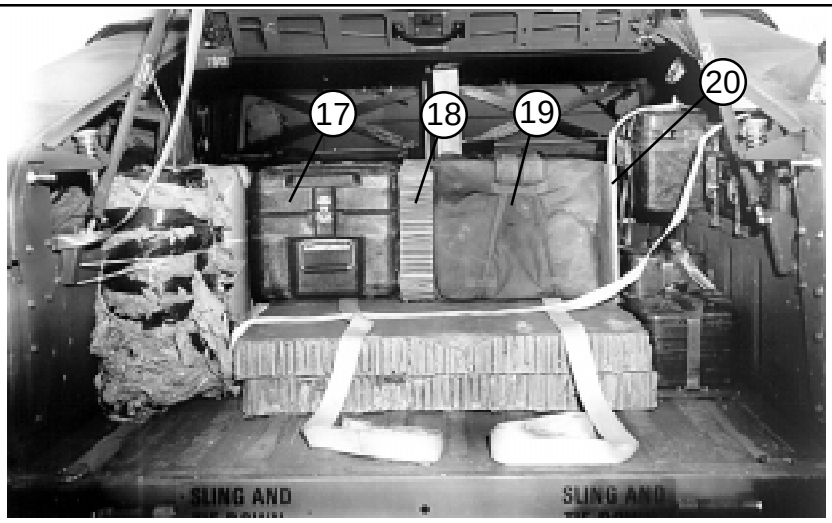

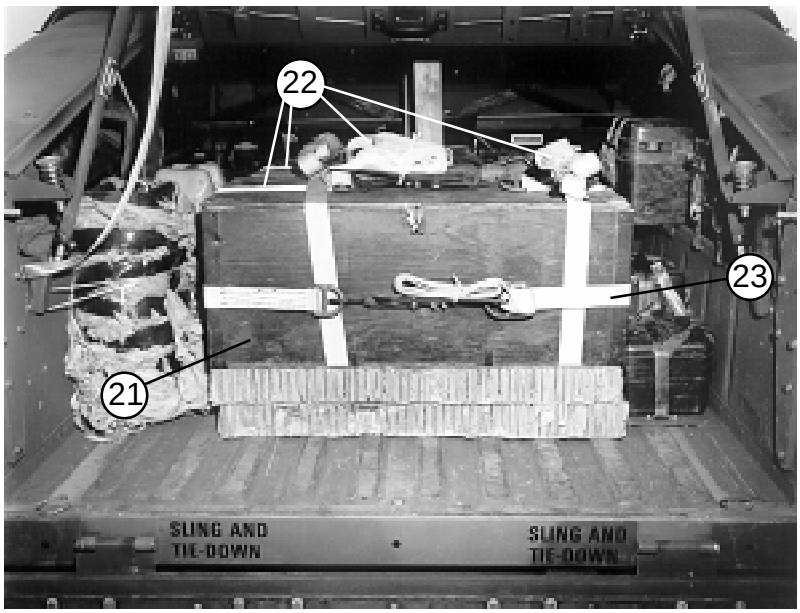

(17) Place the transformer at the left front edge of the honeycomb.

(18) Place a 12 1/2- by 20 1/2-inch piece of honeycomb to the right of the transformer.

(19) Place the laser designator/rangefinder (LD/R) case next to the honeycomb.

(20) Place a 3/4- by 12 1/2- by 20 1/2-inch piece of plywood to the right of the LD/R case.

(21) Place the accessory chest along the rear edge of the honeycomb.

(22) Secure the four lashings placed in step 16 with D-rings and load binders.

(23) Place and secure a fifth 15-foot lashing around the items on the honeycomb.

Figure 5-2. G/VLLD and Accompanying Equipment Rigged in M966 Truck (continued)

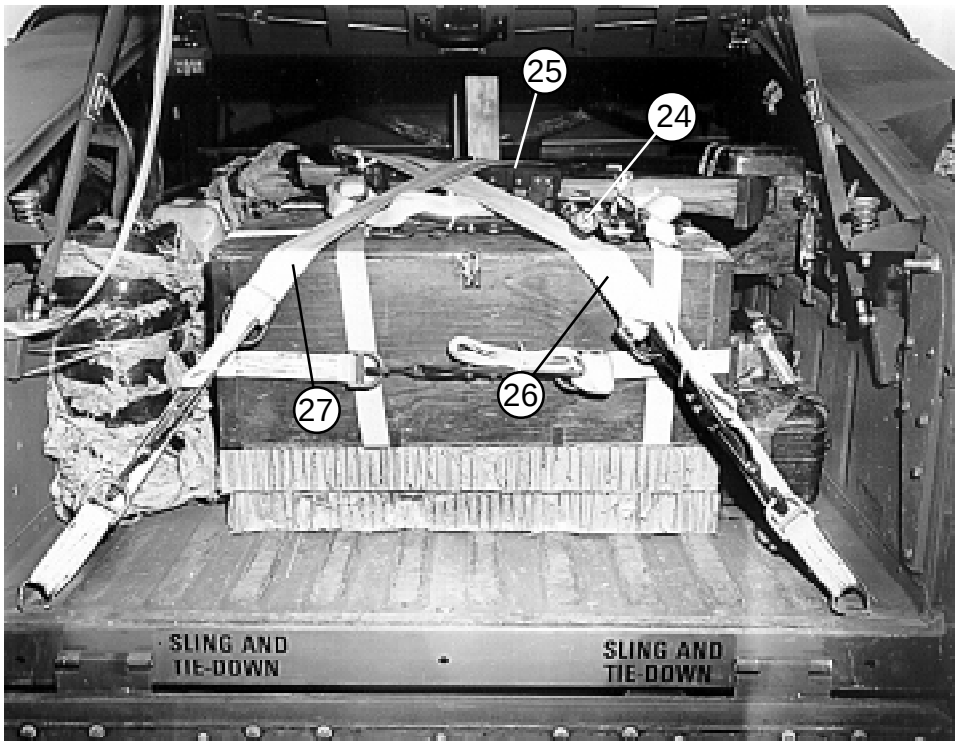

(24) Place the antenna poles on top of the load. Secure them to convenient points with type III nylon cord.

(25) Place any other truck equipment on top of the load, and secure it with 1/2-inch tubular nylon webbing. (The pioneer tool kit is shown, but it is not necessary to remove it from its normal stowage position under the truck.)

(26) Pass a 15-foot lashing over the load from the right rear to the left front tie-down ring. Secure it with a D-ring and a load binder.

(27) Pass a 15-foot lashing over the load from the left rear to the right front tie-down ring. Secure it with a D-ring and a load binder.

Figure 5-2. G/VLLD and Accompanying Equipment Rigged in M966 Truck (continued)

RIGGING AN/USG-70 POSITION AND AZIMUTH DETERMINING SYSTEM (PADS) IN M998 CARGO/TROOP CARRIER

5-3. Use the procedures shown in Figure 5-13 to rig the PADS, camouflage net and poles, fuel can, water can, and four boxes of 105-mm ammunition. The load shown here weighs 834 pounds.

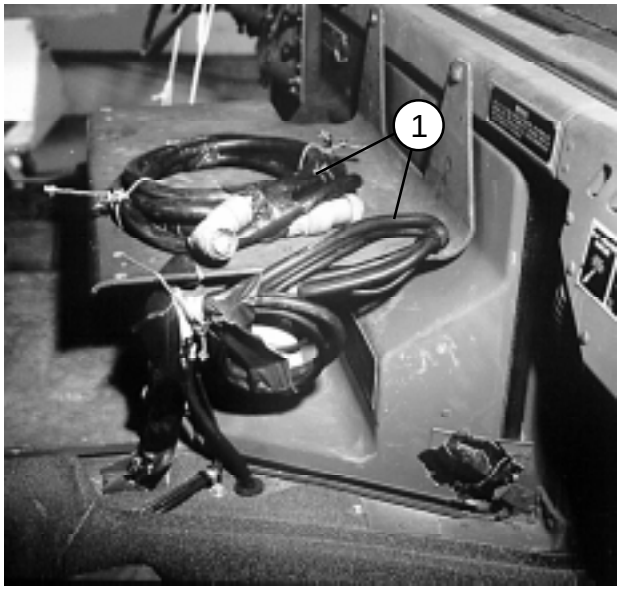

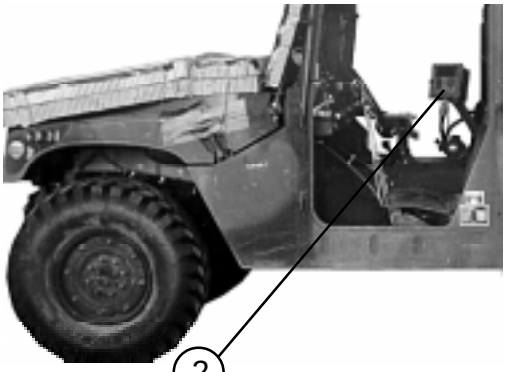

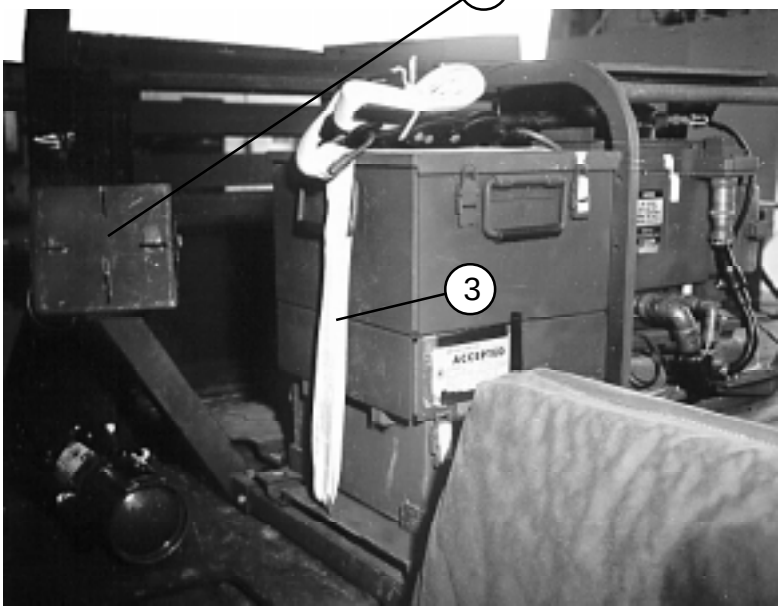

1. Roll and tie any cables. Secure them to the radio rack or other convenient points with type III nylon cord. They may also be stored in the battery box.
2. Remove the computer display unit (CDU) from its mount.
3. Secure the battery box to the tie-downs provided with a 15-foot lashing. Pass the lashing through the handles of the battery box.

Figure 5-3. PADS and Ammunition Rigged in M998 Truck

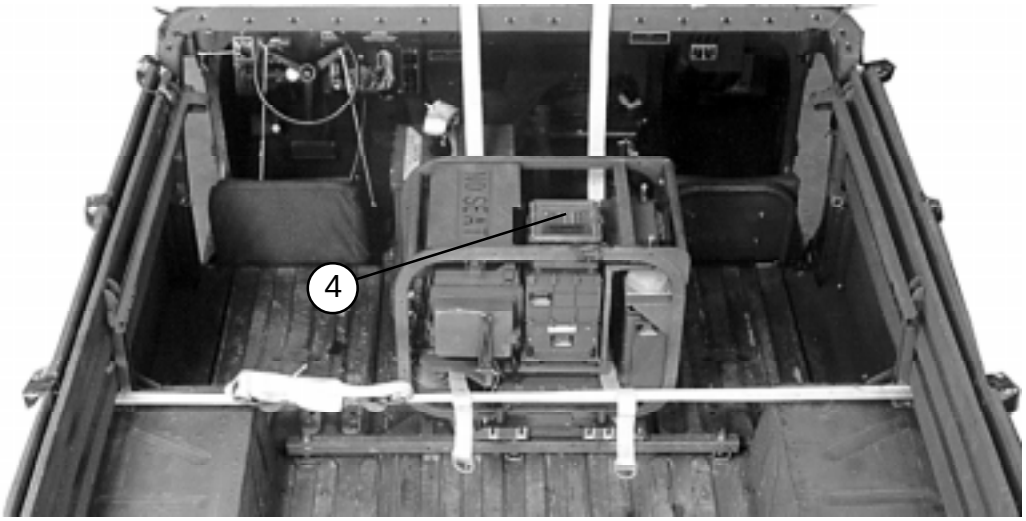

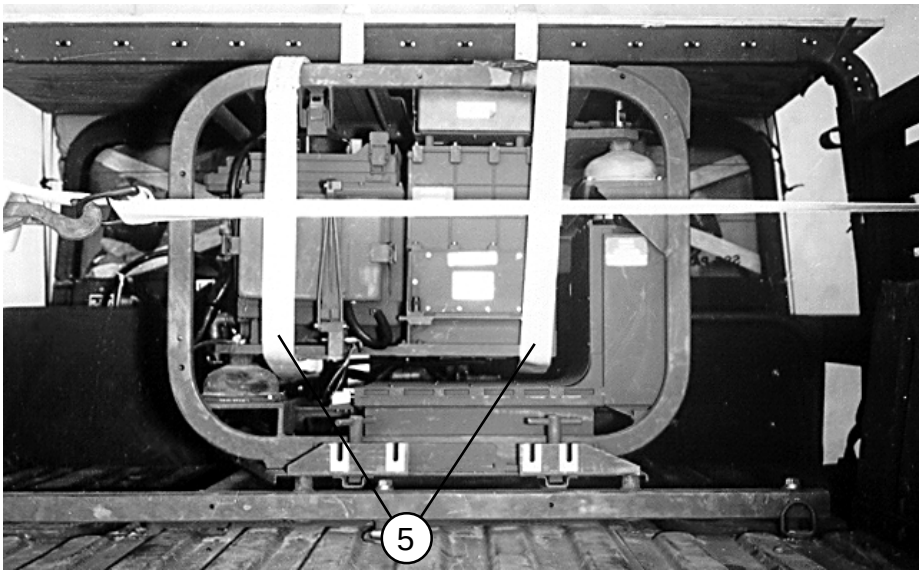

4 Place the CDU in its mount on top of the computer unit. Secure it with the clamps provided.

5 Position two 15-foot lashings under the computer unit and the inertia measuring unit. Keep the lashings away from the plumb bar and the cables under the computer.

Figure 5-3. PADS and Ammunition Rigged in M998 Truck (continued)

Notes: 1. This drawing is not drawn to scale.
2. All dimensions are in inches.

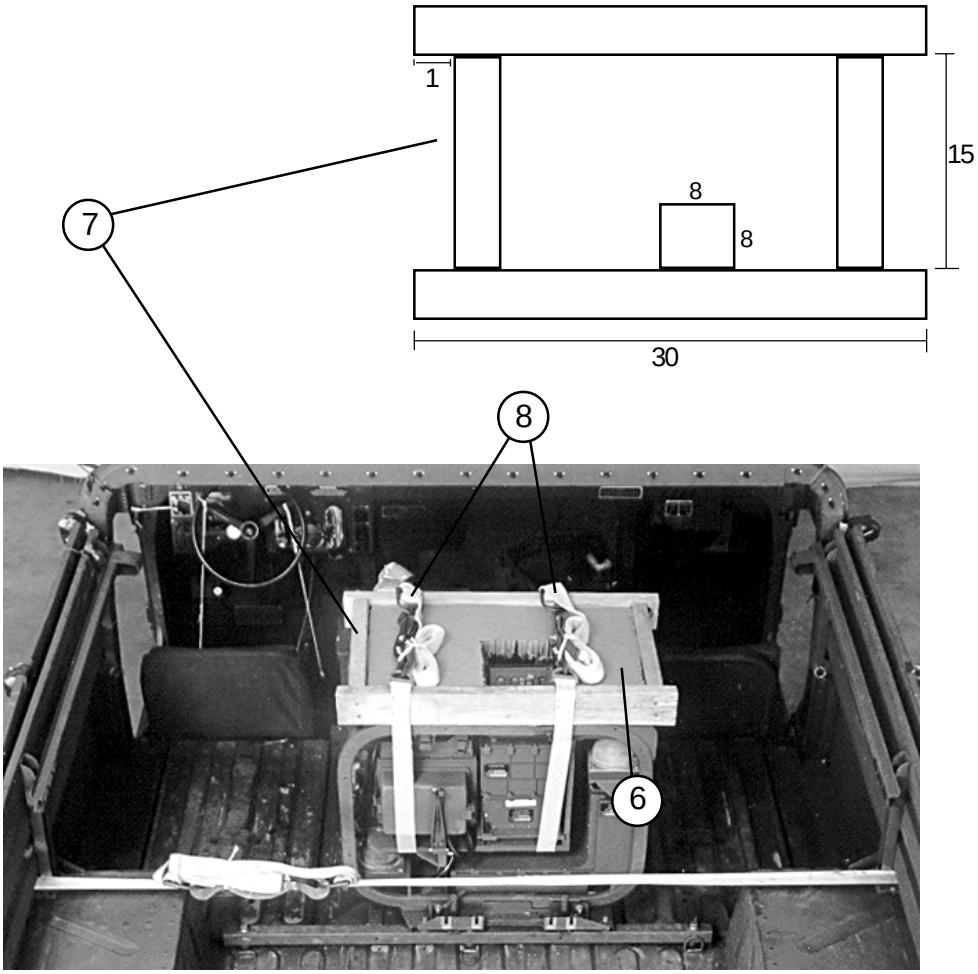

(6) Center a 15- by 25-inch piece of honeycomb over the top of the equipment rack. Position an 8- by 8-inch cutout along the rear edge of the honeycomb to accommodate the CDU.

(7) Construct a wood frame as shown using 2- by 4-inch lumber and 6-penny nails. Fit the wood frame around the honeycomb placed in step 6 above.

(8) Fasten the lashings placed in step 5 over the honeycomb with D-rings and load binders.

Figure 5-3. PADS and Ammunition Rigged in M998 Truck (continued)

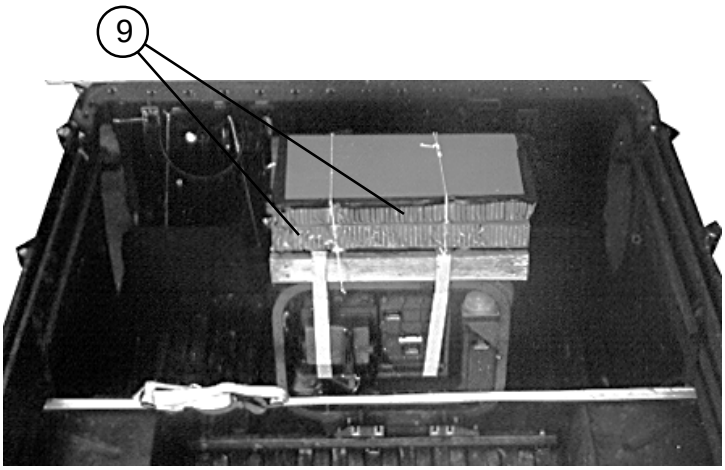

9 Place two 14- by 14-inch pieces of honeycomb over the battery box. Place two 18- by 31-inch pieces of honeycomb over the wood frame. Tape the edges of the top layers, and tie the honeycomb over the components with type III nylon cord.

Figure 5-3. PADS and Ammunition Rigged in M998 Truck (continued)

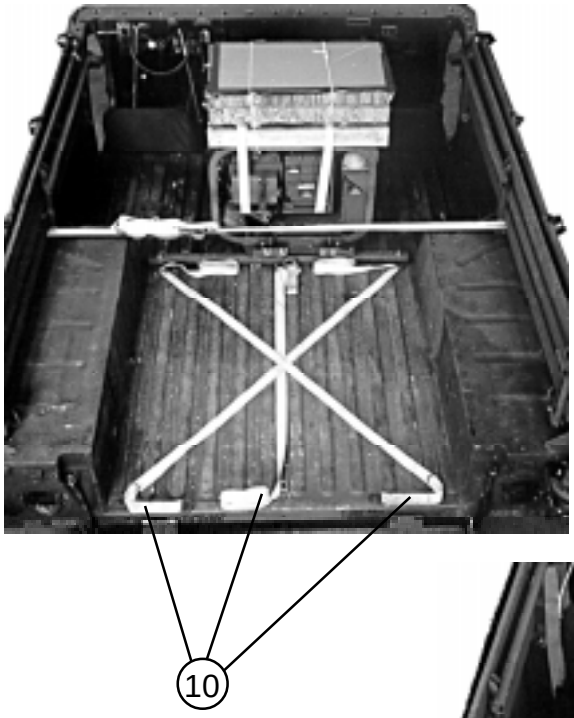

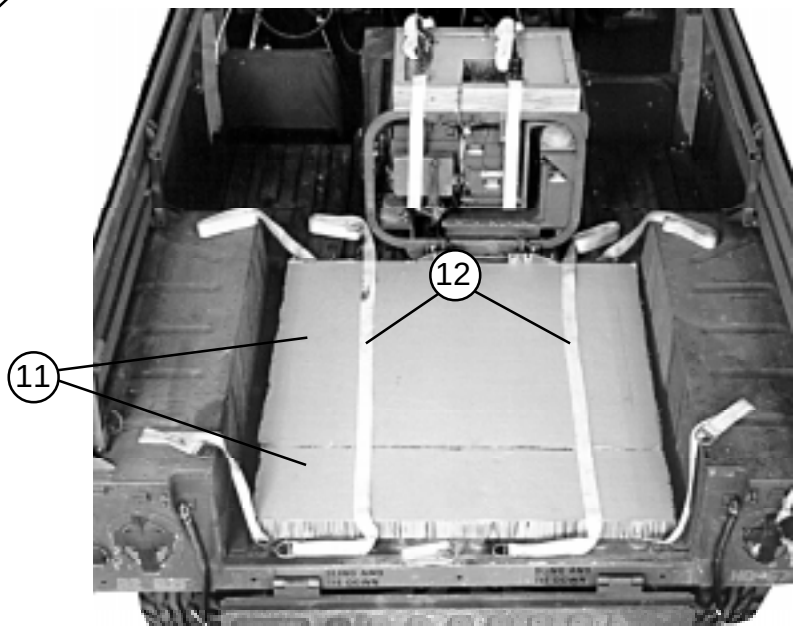

(10) Pass a 15-foot lashing through the center tie-down rings. Pass a 5-foot lashing through the left front and right rear tie-down rings. Pass another 15-foot lashing through the left rear and right front tie-down rings.

(11) Place a 12- by 48-inch piece and a 36- by 48-inch piece of honeycomb as a single layer over the lashings.

(12) Position two 15-foot lashings 10 inches from each side of the honeycomb.

Figure 5-3. PADS and Ammunition Rigged in M998 Truck (continued)

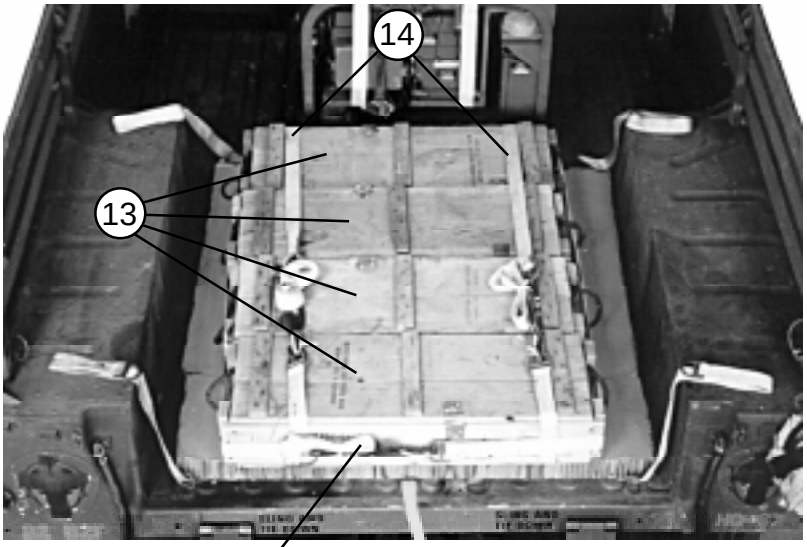

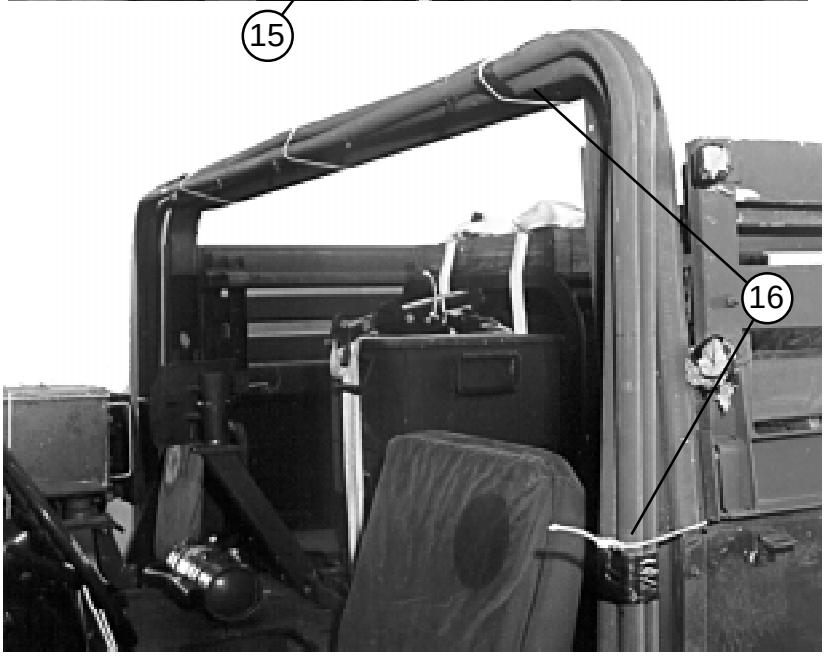

(13) Center four boxes of ammunition on the honeycomb.

(14) Bind the boxes together with the lashings placed in step 10.

(15) Run a 15-foot lashing through all the box carying handles. Fasten the lashing at the rear of the boxes.

(16) Tape the truck tarpaulin support bows together, and tie them to the B-pillar with type III nylon cord.

Figure 5-3. PADS and Ammunition Rigged in M998 Truck (continued)

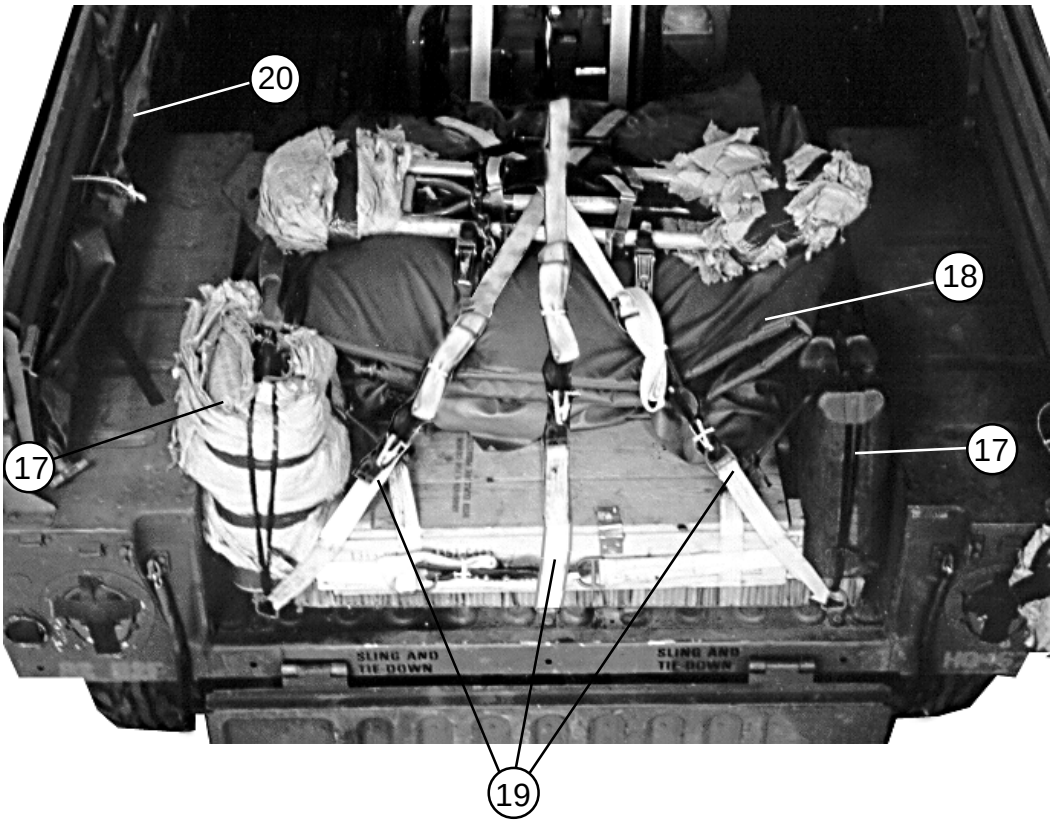

(17) Set a padded fuel can and a plastic water can between the ammunition boxes and wheel wells at the rear of the load. Tie them to the nearest tie-down rings, to the PADS frame, and to the binding lashings with 1/2-inch tubular nylon webbing.

(18) Place the camouflage net and pole bags, the cab doors, the truck cab cover, and tarpaulin on top of the ammunition boxes.

Note: The pioneer tool kit is also shown, but it does not need to be removed from its rack under the truck.

(19) Fasten the three lashings placed in step 10 over the load with D-rings and load binders.

(20) Tie the antenna, cab cover supports, or other loose objects to the side slats with type III nylon cord.

(21) Close the tailgate and tie it with 1/2-inch tubular nylon webbing (not shown).

Figure 5-3. PADS and Ammunition Rigged in M998 Truck (continued)

RIGGING BATTERY COMPUTER SYSTEM (BCS) IN M998 TRUCK

5-5. Use the procedures shown in Figure 5-4 to rig the BCS, camouflage net and poles, generator, and truck and crew equipment. This accompanying load weighs 801 pounds.

Note: Be sure the unit owning the truck has installed the BCS in its mount and the solid side boards on the truck.

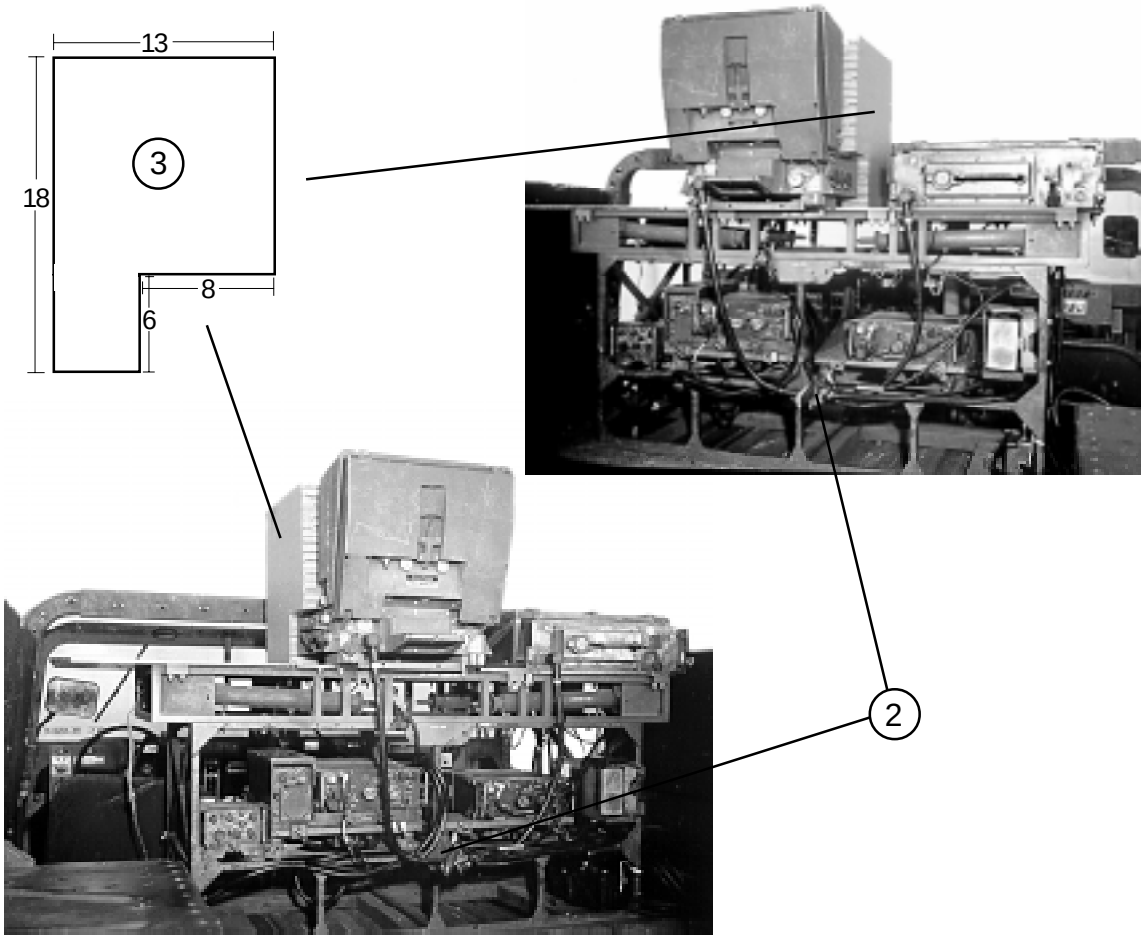

1. Remove the anntenna mount on the left side of the truck. Wrap it with cellulose wadding taped in place. Place the mount in the camouflage net bag (not shown).
2. Roll loose cables and tie or tape them to the BCS mount. Tape all exposed cable connectors.
3. Cut two 13- by 18-inch pieces of honeycomb, with cutouts as shown. Place one on each side of the computer box with the cutouts facing the rear.

Figure 5-4. BCS and Accompanying Equipment Rigged in M998 Truck

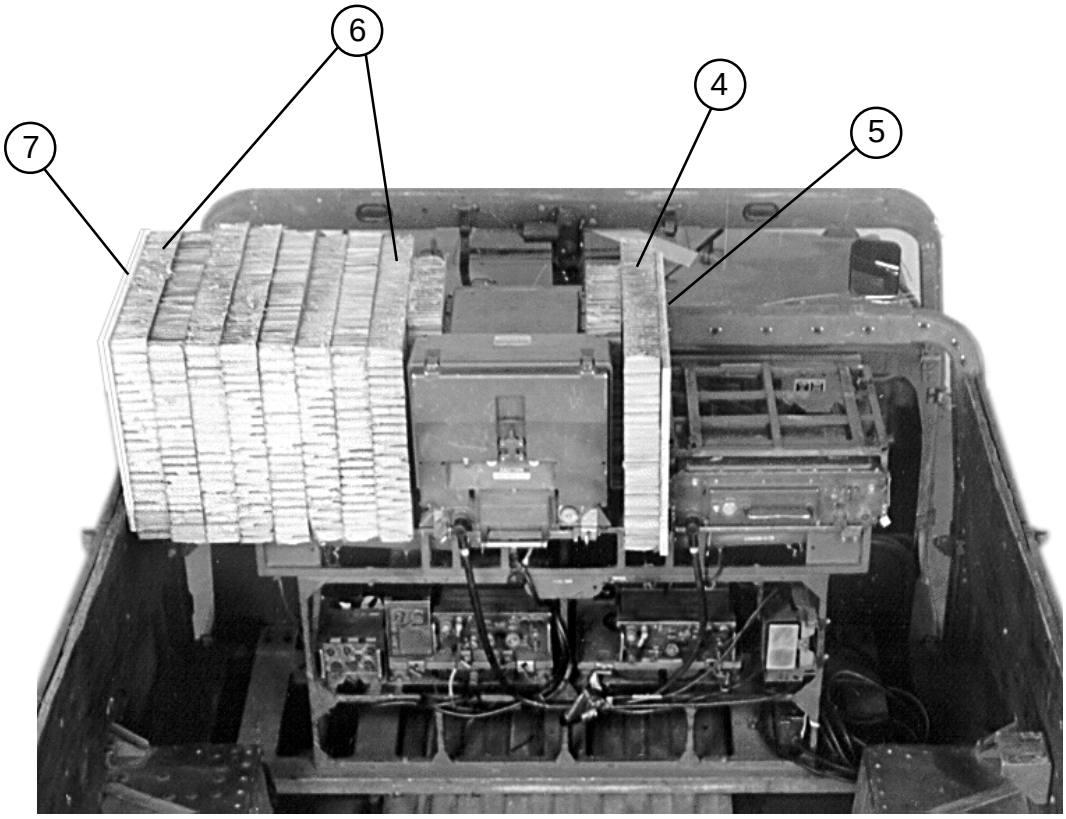

4 Center an 18- by 25-inch piece of honeycomb against the right side of the computer box.

5 Place a 3/4- by 18- by 25-inch piece of plywood flush against the honeycomb placed in step 4 above.

6 Center eight 18- by 25-inch pieces of honeycomb against the left side of the computer box.

7 Place a 3/4- by 18- by 25-inch piece of plywood flush against the left side of the honeycomb placed in step 6 above.

Figure 5-4. BCS and Accompanying Equipment Rigged in M998 Truck (continued)

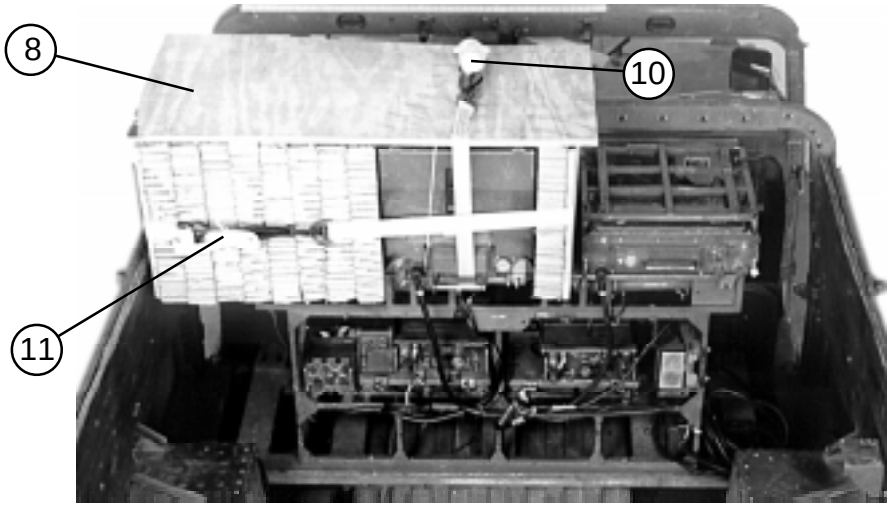

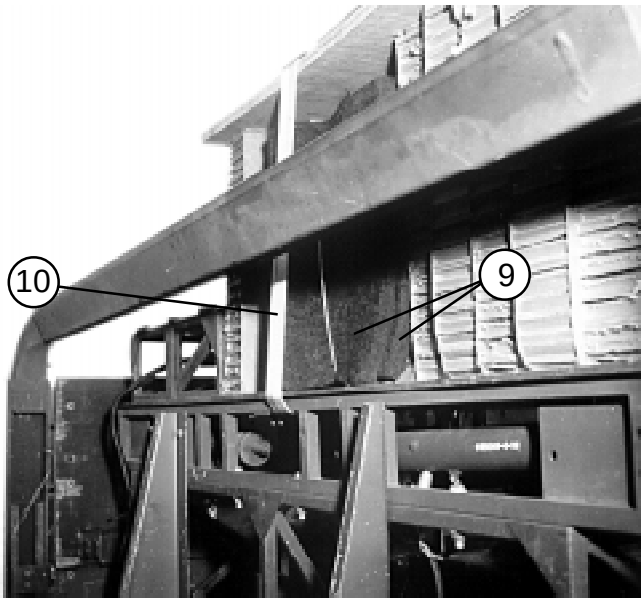

8 Place a 3/4- by 27- by 47-inch piece of plywood flush over the honeycomb and plywood placed in steps 4 through 7.

9 Pad the front side of the computer box with two 12- by 16-inch pieces of felt. Tie the felt in place with type III nylon cord.

10 Run a 15-foot lashing around the computer box, through the rear carrying handle, and under the top bar of the mount. Fasten the lashing on top of the plywood cover.

11 Run a 15-foot lashing around the plywood and honeycomb placed in steps 4 through 7. Fasten the lashing on the rear side.

Figure 5-4. BCS and Accompanying Equipment Rigged in M998 Truck (continued)

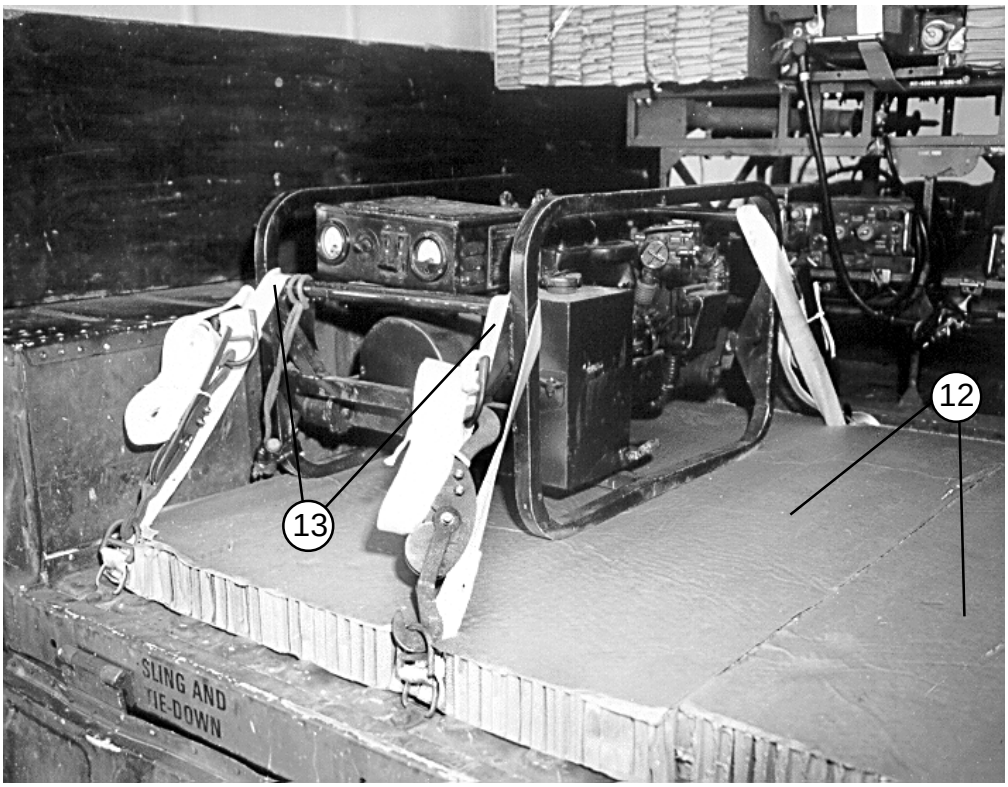

(12) Cover the bed of the truck between the center and rear tie-down rings with a 12- by 48-inch piece and a 36- by 48-inch piece of honeycomb. Place the honeycomb as shown.

(13) Place the generator on the honeycomb against the left wheel well. Lash each corner of the generator frame to the nearest tie-down ring.

Figure 5-4. BCS and Accompanying Equipment Rigged in M998 Truck (continued)

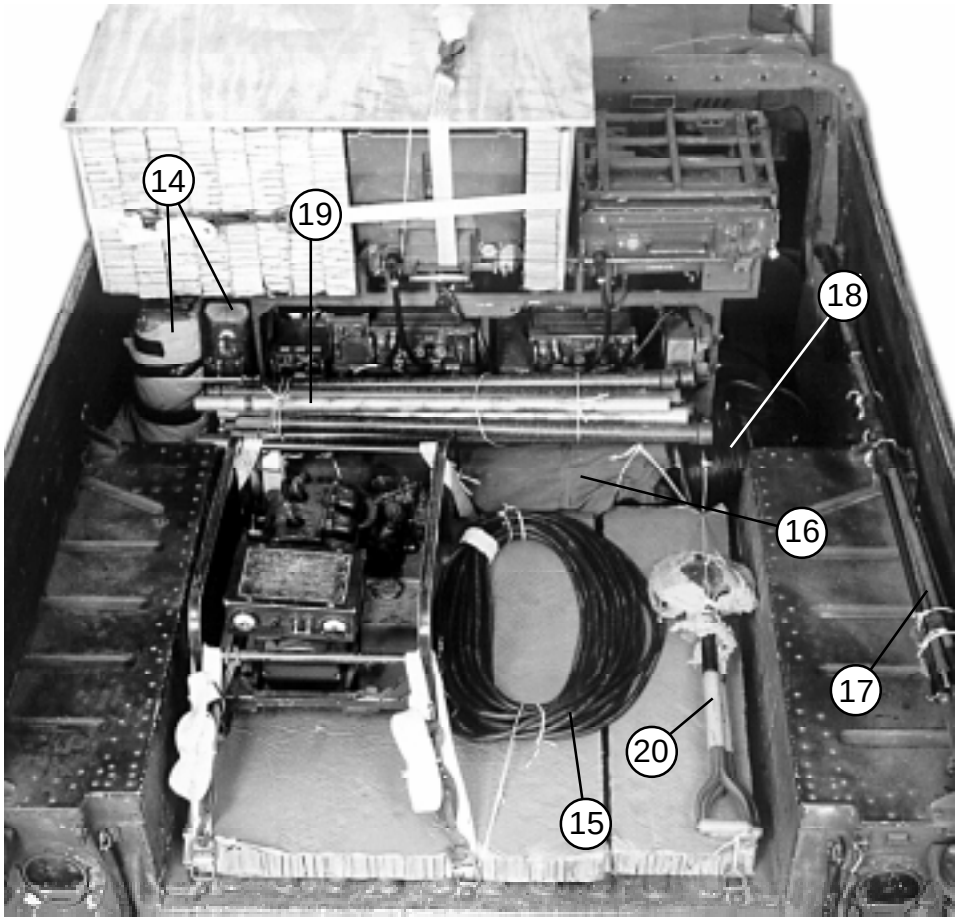

(14) Set a padded fuel can and a plastic water can to the left of the BCS rack. Tie them to the rack with type III nylon cord.

(15) Roll and tie the generator cable with type I, 1/4-inch cotton webbing. Lay it to the right of the generator, and tie the cable to the center tie-down rings with type III nylon cord.

(16) Place the antenna bag on the floor across the front of the BCS rack. Use type III nylon cord to tie the ends of the bag, and to secure the bag to the nearest tie-down rings.

(17) Secure the small truck antenna to the truck sideboards with type III nylon cord.

(18) Place the spool of communications wire over the right center tie-down ring. Tie it to the ring with type III nylon cord.

(19) Place the camouflage net poles over the antenna bag. Secure them to the left and right center tie-down rings with type III nylon cord.

(20) Pad the blades of the two shovels with cellulose wadding taped in place. Tie the shovels to the right rear and right center tie-down rings with type III nylon cord.

Figure 5-4. BCS and Accompanying Equipment Rigged in M998 Truck (continued)

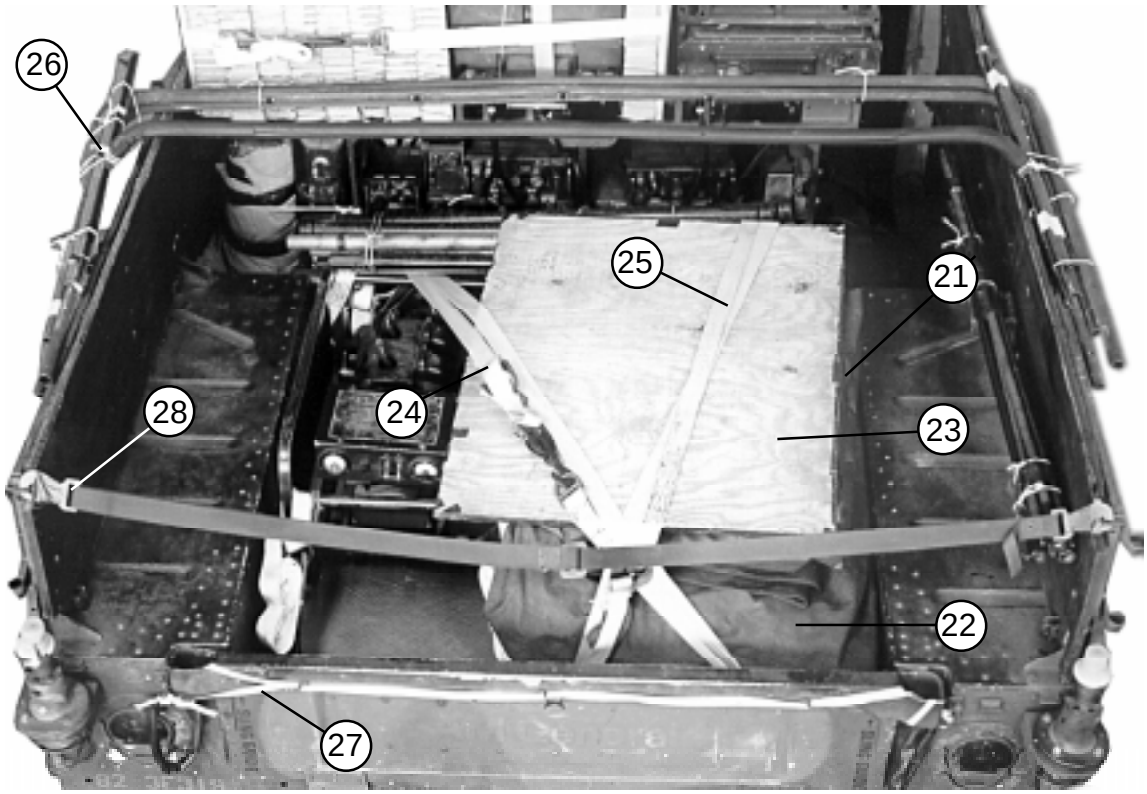

21 Place the camouflage net bag on the right side of the cargo bed.

22 Fold the tarpaulin and cab cover, and place them over the generator cable and shovels.

23 Place the plotting boards over the truck covers.

24 Pass a 15-foot lashing through the right rear tie-down ring, over the plotting boards, and through the left front tie-down ring. Secure the lashing on top of the load.

25 Pass a 15-foot lashing through the center rear tie-down ring, over the plotting boards, and through the right front tie-down ring. Secure the lashing on top of the load.

26 Tie the bows together with type III nylon cord. Tie them to the sideboards with type III nylon cord.

27 Close the tailgate, and secure it with 1/2-inch tubular nylon webbing.

28 Tape the snap hooks on the safety strap.

Figure 5-4. BCS and Accompanying Equipment Rigged in M998 Truck (continued)

RIGGING AN/VSC-2 RADIOTELETYPE IN M998 TRUCK

5-6. Use the procedures shown in Figure 5-5 to rig the AN/VSC-2 radioteletype, two generators, and truck and crew equipment. This load weighs 1,373 pounds.

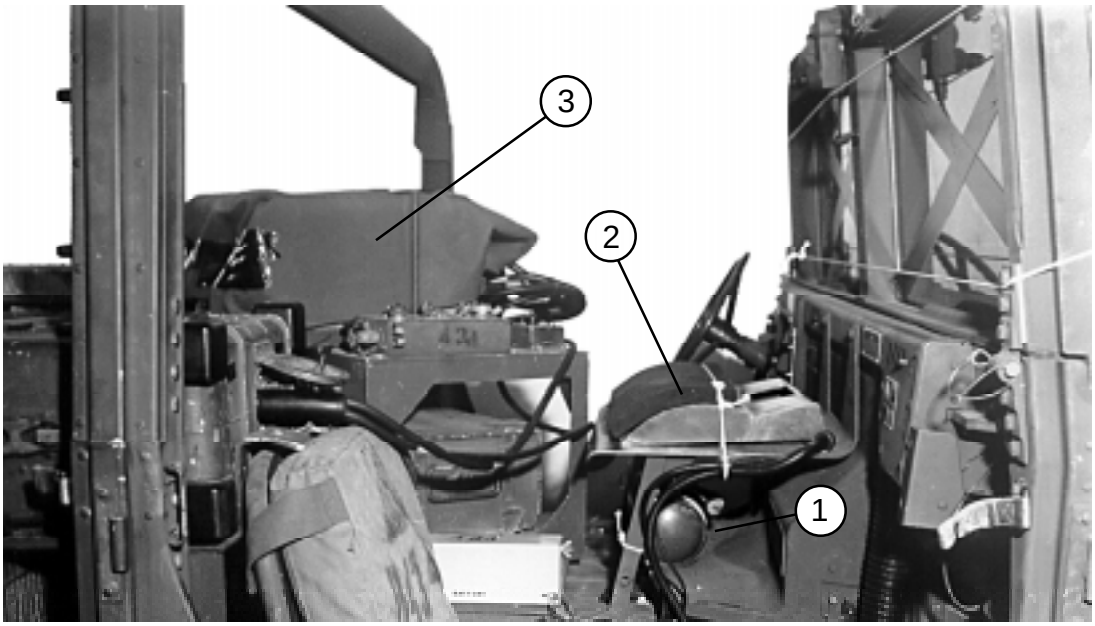

1. Tie the fire extinguisher to the radio mount supports with type III nylon cord.
2. Tie the radioteletype operator backrest to the radio mount with type III nylon cord.
3. Cover the crypto unit with cotton duck cloth, and tape the cloth in place.

Figure 5-5. AN/VSC-2 Radioteletype Rigged in M998 Truck

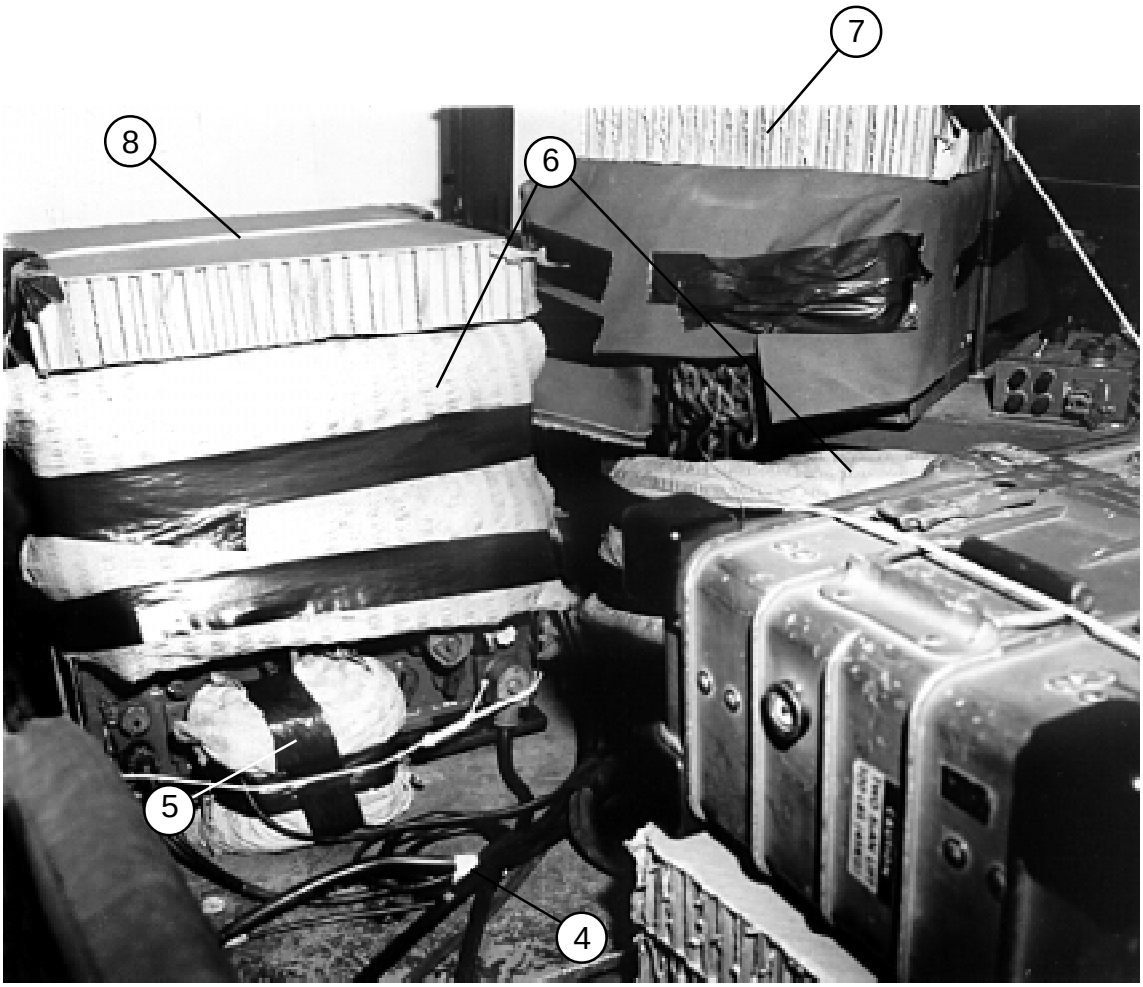

4 Roll and tape all loose cables.

5 Pad the speaker with cellulose wadding taped in place. Tie the speaker to the lifting handles of the bottom radio with type III nylon cord.

6 Pad the upper radio controls with cellulose wadding taped in place.

7 Tape the edges of a 12- by15-inch piece of honeycomb. Tie the honeycomb over the crypto unit with 1/2-inch tubular nylon webbing.

8 Tape the edges of a 14- by 18-inch piece of honeycomb. Tie the honeycomb over the radio with type III nylon cord.

Figure 5-5. AN/VSC-2 Radioteletype Rigged in M998 Truck (continued)

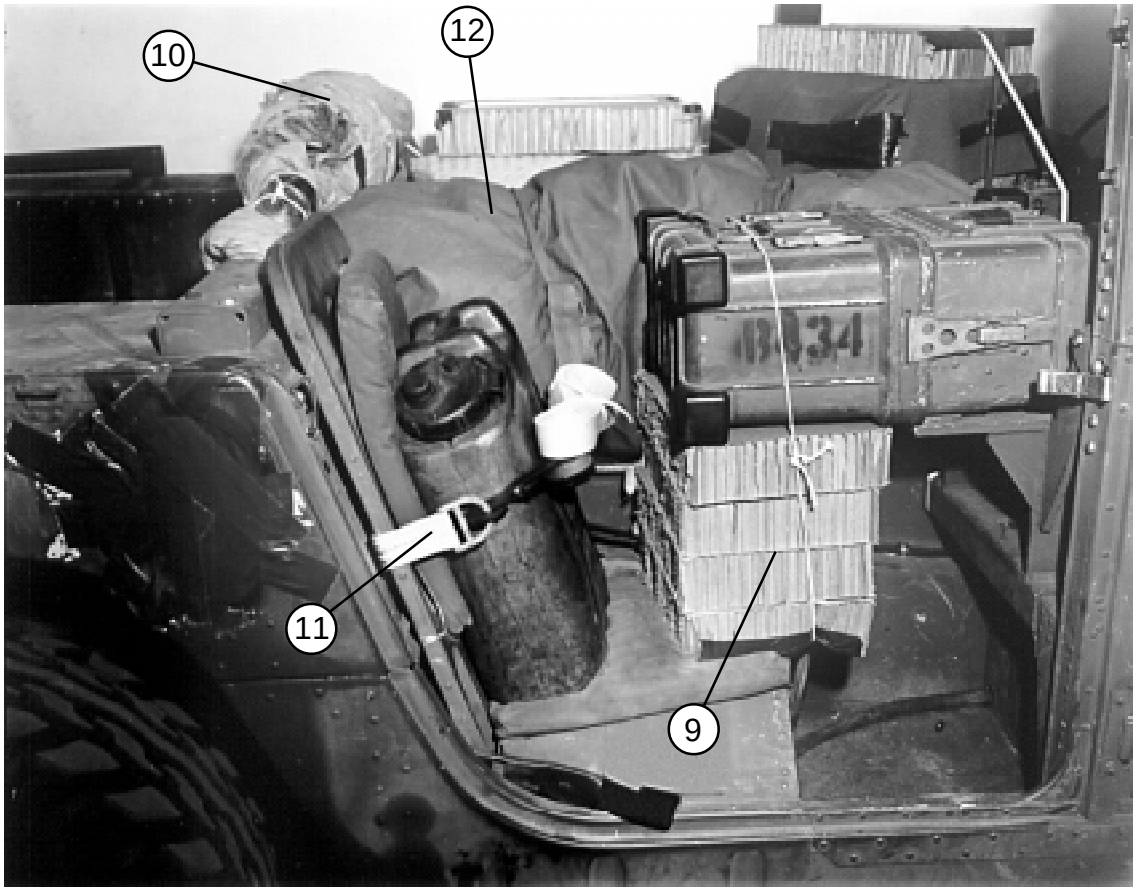

9 Place four 10- by 16-inch pieces of honeycomb between the teletype cover and the seat cushion. Tape the bottom edges of the stack, and tie the stack to the teletype cover with type III nylon cord.

10 Detach the antenna from its mount, and remove the mount from the crossbar. Wrap the mount generously in cellulose wadding. Tape the cellulose wadding in place. Tie the antenna mount along the crossbar with four lengths of type III nylon cord.

11 Lash a filled plastic water can to the right rear seat back with a 15-foot lashing, a D-ring, and a load binder.

12 Lay the camouflage net bag between the rear seats and in the space between the teletype and radio sets. Secure it with a length of 1/2-inch tubular nylon webbing tied to the brace behind the driver's seat and to the crossbar behind the rear seats.

Figure 5-5. AN/VSC-2 Radioteletype Rigged in M998 Truck (continued)

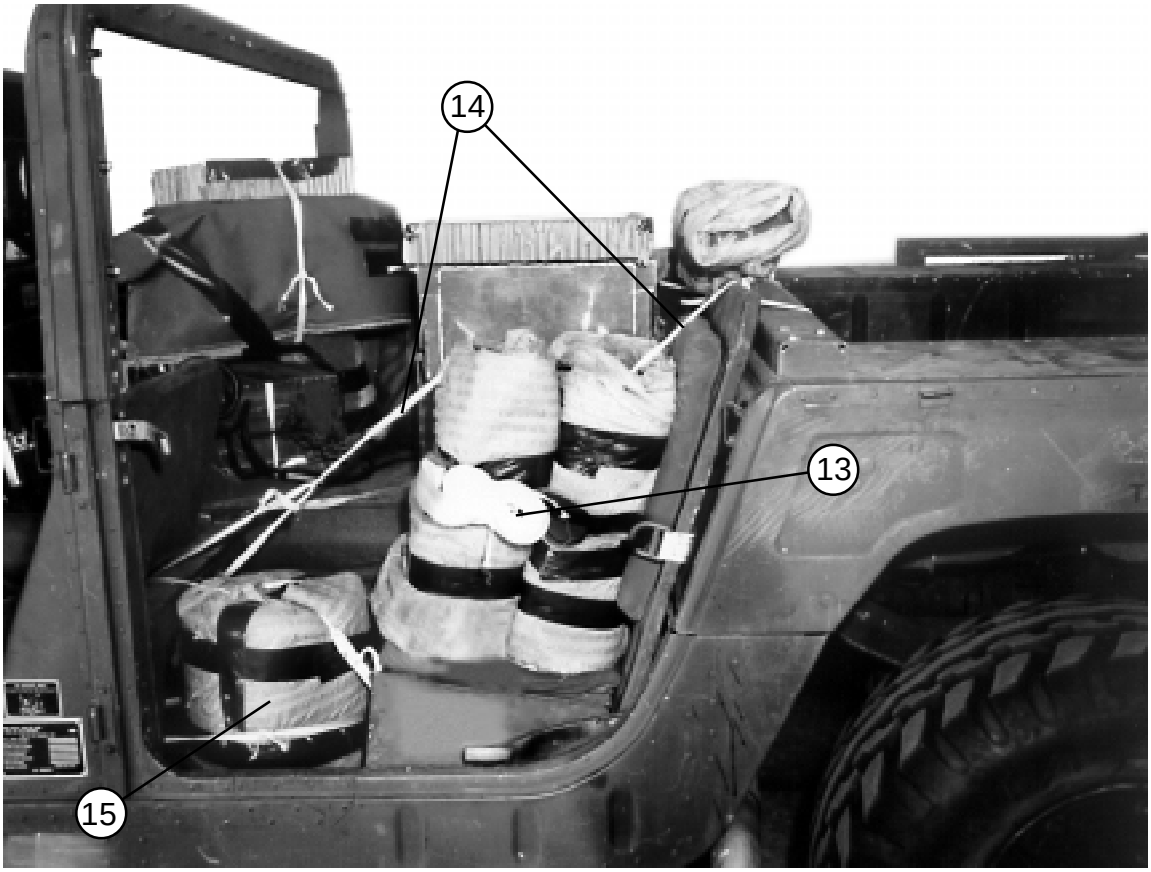

(13) Wrap two filled fuel cans with cellulose wadding taped in place. Lash the fuel cans to the left rear seat back with a 15-foot lashing, a D-ring, and a load binder.

(14) Tie a length of 1/2-inch tubular nylon webbing to the brace behind the driver's seat. Run the webbing through the fuel can handles, and tie it to the crossbar behind the left rear seat.

(15) Wrap an oil can with cellulose wadding taped in place. Tie the oil can to the rear seat hinges and to the front seat with 1/2-inch tubular nylon webbing.

Figure 5-5. AN/VSC-2 Radioteletype Rigged in M998 Truck (continued)

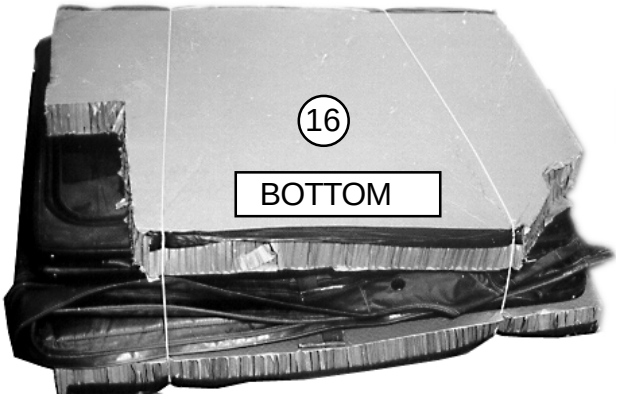

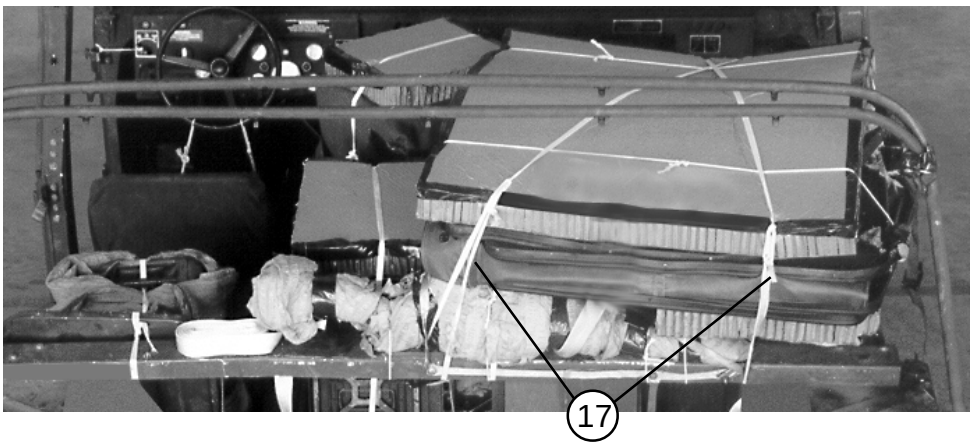

(16) Place the truck doors and cover between two 36- by 46-inch pieces of honeycomb. Make a 6- by 16-inch cutout in the bottom piece to allow for the antenna mount. Cut the adjacent corner about 8 inches to allow for the crypto box. Tape the bottom and top edges of the honeycomb. Tie the bundle together with two lengths of type III nylon cord

(17) Place the doors and cover on top of the right rear seat and teletype, with the cutout in the bottom honeycomb piece over the antenna mount. Tie the bundle to the crossbar and front seat braces with two lengths of 1/2-inch tubular nylon webbing.

Figure 5-5. AN/VSC-2 Radioteletype Rigged in M998 Truck (continued)

(18) Form four 30-foot lashings according to FM 4-20.102/TO 13C7-1-5.

(19) Center a lashing through the rear center tie-down ring.

(20) Center a lashing through the front center tie-down ring.

(21) Pass a lashing through the front and rear tie down rings on each side.

Figure 5-5. AN/VSC-2 Radioteletype Rigged in M998 Truck (continued)

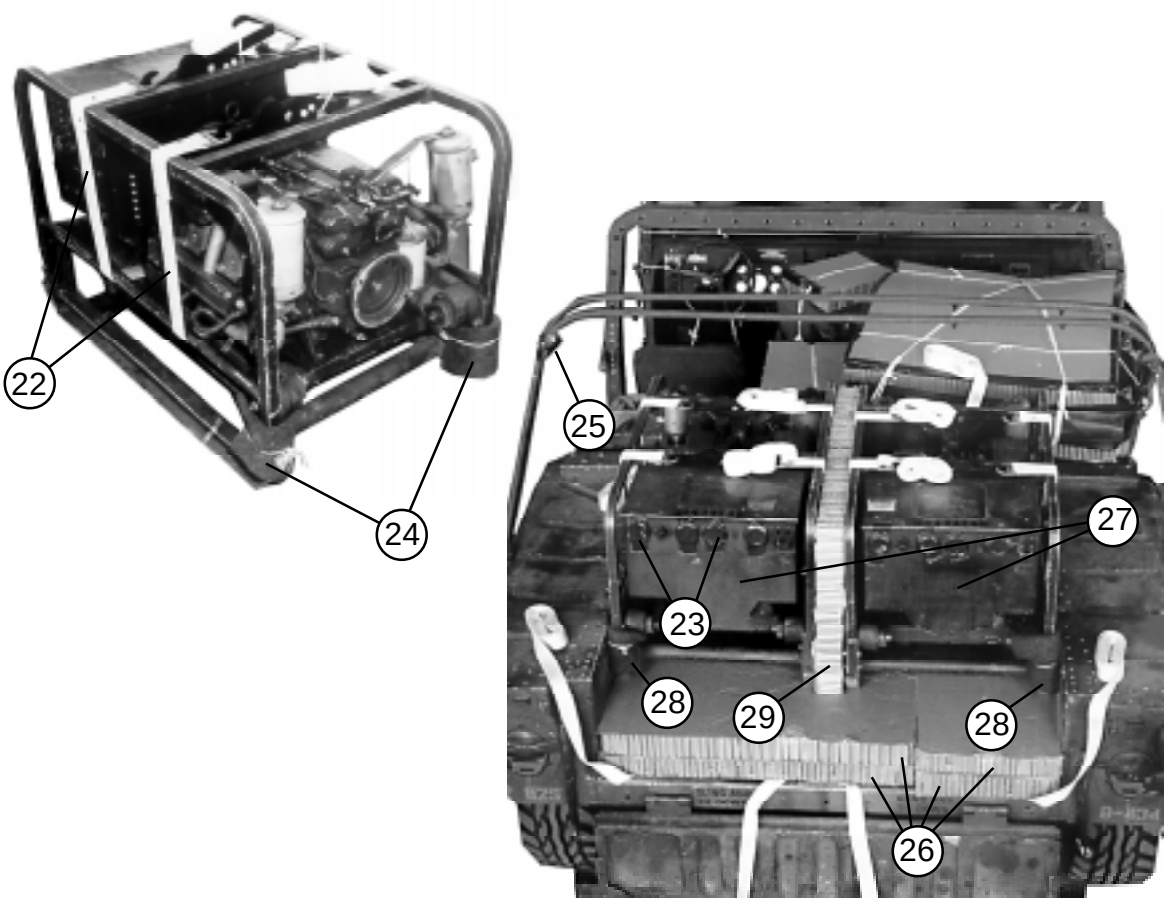

(22) Pass two 15-foot lashings around the center and top horizontal bars of each generator.

(23) Tape the gauges.

(24) Pad the front ends of the generator frames with felt. Tie the felt in place with type III nylon cord.

(25) Raise the truck bows, but do not detach them.

(26) Cover the cargo bed, using two 36- by 42-inch pieces, and two 16- by 42-inch pieces of honeycomb as shown above.

(27) Place the two generators against the crossbar, facing as shown.

(28) Pad the outside rear frames with felt, tied in place with type III nylon cord.

(29) Place a 24- by 34-inch piece of honeycomb between the two generators.

Figure 5-5. AN/VSC-2 Radioteletype Rigged in M998 Truck (continued)

(30) Pad three filled fuel cans with cellulose wadding, and tape the wadding in place. Set the fuel cans flat against the rear of the generators.

(31) Tie a filler nozzle to the center can handle with type III nylon cord.

(32) Close the tailgate and tie it with 1/2-inch tubular nylon webbing.

(33) Secure the fuel cans to the tailgate brackets with 1/2-inch tubular nylon webbing, running the webbing through the can handles.

Figure 5-5. AN/VSC-2 Radioteletype Rigged in M998 Truck (continued)

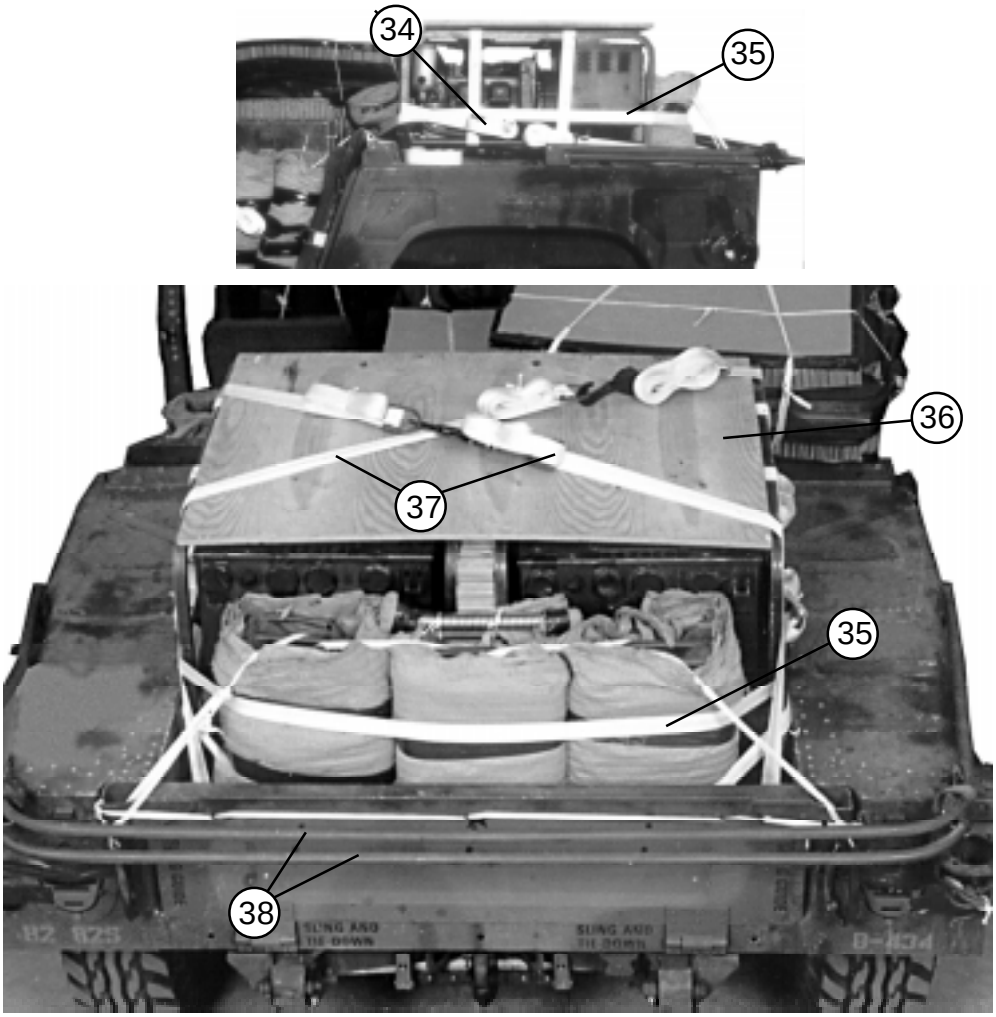

(34) Run the lashing placed in step 19 around the front of the generators. Secure it with two D-rings and a load binder on the side of the load.

(35) Run the lashing placed in step 20 around the rear of the fuel cans. Secure it with two D-rings and a load binder on the side of the load.

(36) Place a 3/4- by 32- by 50-inch piece of plywood over the generators.

(37) Join the running ends of the lashings placed in step 21 as follows: left front to right rear, and left rear to right front. Fasten the lashings on top of the plywood with two D-rings and a load binder.

(38) Lower the bows toward the rear of the truck.

Figure 5-5. AN/VSC-2 Radioteletype Rigged in M998 Truck (continued)

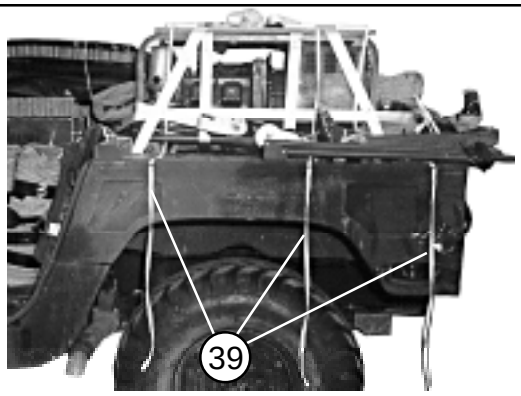

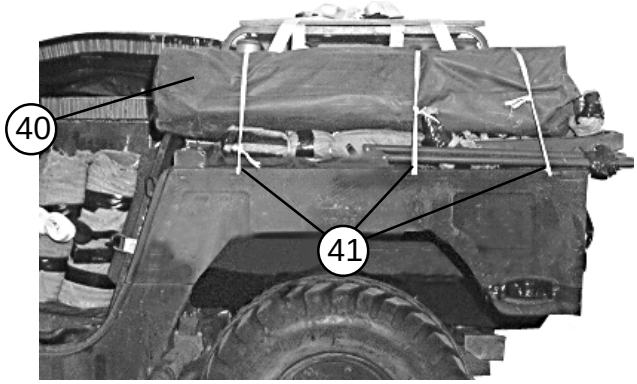

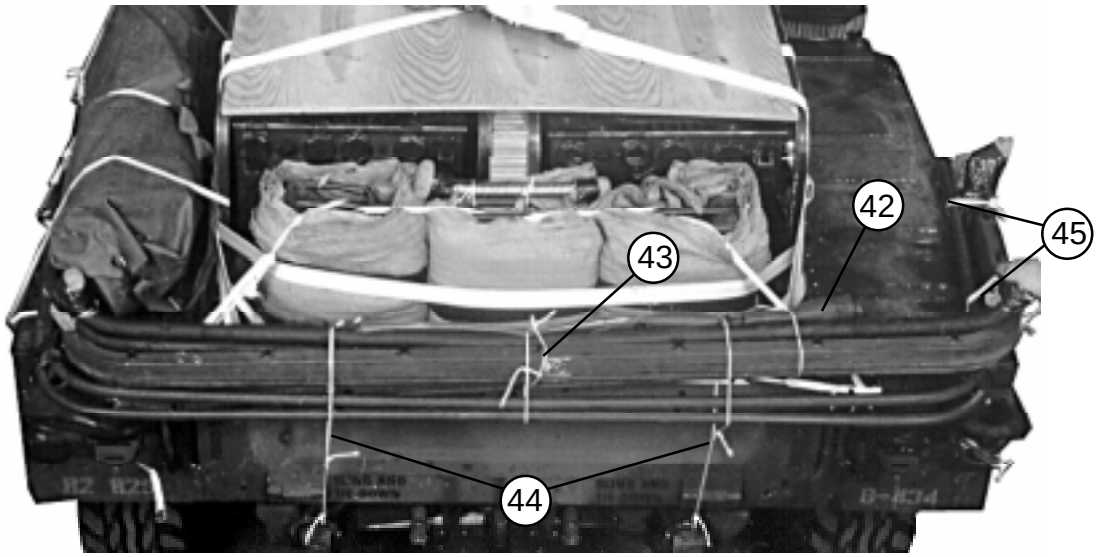

(39) Place three 10-foot lengths of 1/2-inch tubular nylon webbing over the wheel wells and down through the footman loops. Extend the webbing under the horizontal bar on the generator frame and up over the generator.

(40) Lay the antenna case, the probe rods and stake driver, and the camouflage net pole bag (in order) over the webbing on the wheel well.

(41) Tie the three lengths of nylon over the items placed in step 40 above.

(42) Lay the soft top enclosure supports over the folded bows at the rear of the truck. Pad and tape all sharp fixtures.

(43) Tie the items together with type III nylon cord.

(44) Tie all the bows to the rear shackles with type III nylon cord.

(45) Tie all the bows to the footman loops with 1/2-inch tubular nylon webbing.

Figure 5-5. AN/VSC-2 Radioteletype Rigged in M998 Truck (continued)

RIGGING DIVISION ASSAULT COMMAND RADIO SYSTEM IN M998 TRUCK

5-7. Use the procedures shown in Figure 5-6 to rig the Division Assault Command Radio System, and truck and crew equipment. This load weighs 1,520 pounds.

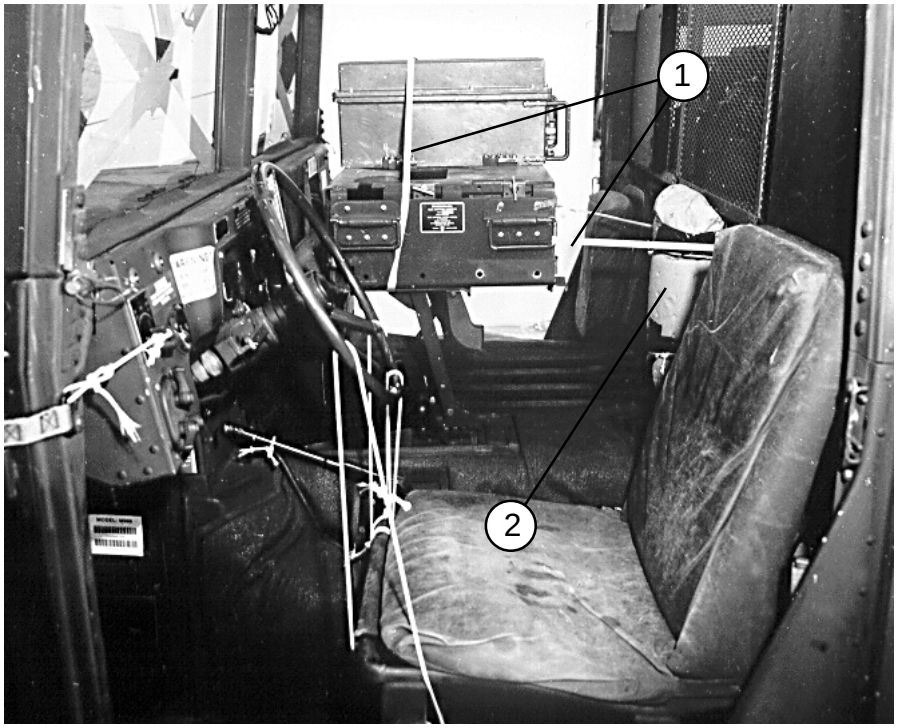

(1) Secure the cab-mounted radios to their mounts and to the rack behind the seats with 1/2-inch tubular nylon webbing.

(2) Wrap the fire extinguisher with cellulose wadding taped in place. Tie the fire extinguisher to the radio rack behind the seats with type III nylon cord.

Figure 5-6. Division Assault Command Radio System and Truck Equipment Rigged in M998 Truck

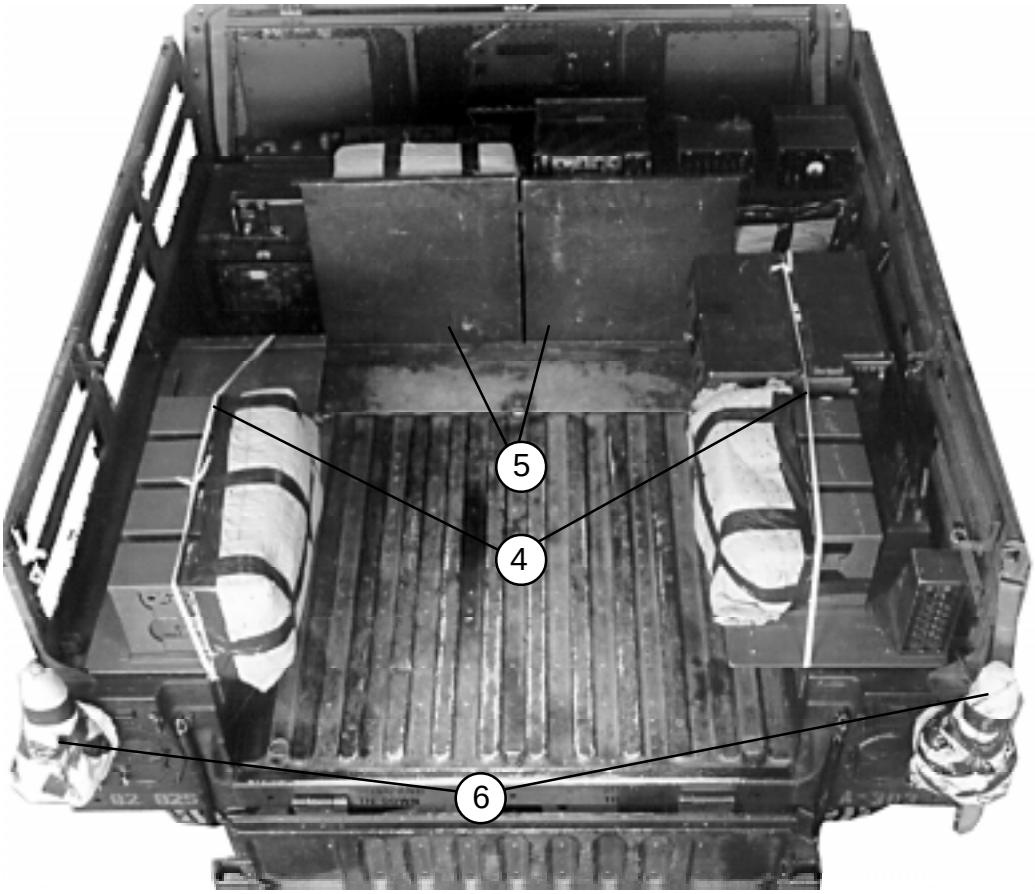

3 Make sure all radio equipment is secured in its mounts. Reinforce the equipment and mounts with 1/2-inch tubular nylon webbing if necessary (not shown).

4 Secure the communications security devices (shown covered with paper) to their racks with 1/2-inch tubular nylon webbing.

5 Place the tabletops on edge in the area between the cargo floor and the equipment racks.

6 Pad the rear antenna mounts with cellulose wadding. Tape the wadding in place.

7 Remove the antenna mount from the left side of the truck. Pad it with cellulose wadding, and place it in the radio equipment chest (not shown).

Figure 5-6. Division Assault Command Radio System and Truck Equipment Rigged in M998 Truck (continued)

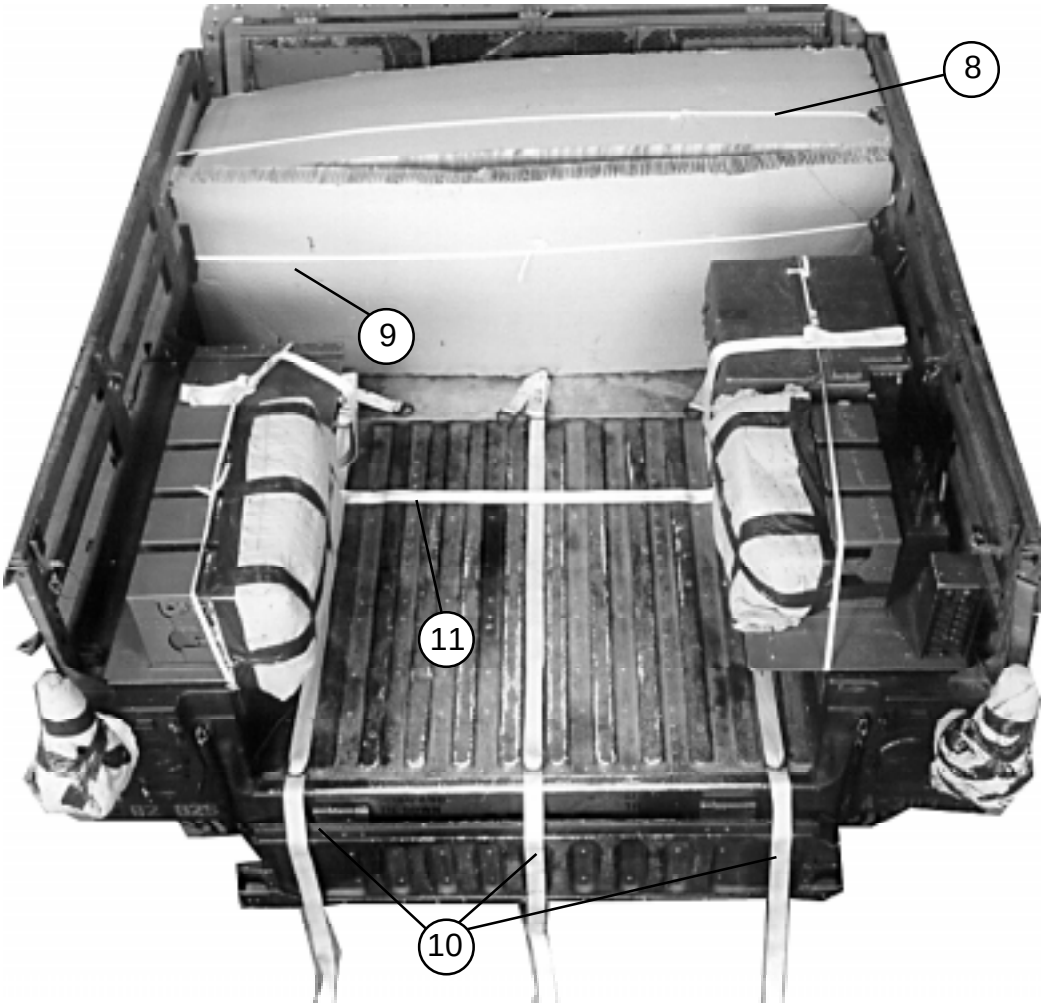

8 Place a 79- by 21-inch piece of honeycomb over the radios. Secure it with 1/2-inch tubular nylon webbing.

9 Place a 79- by 27-inch piece of honeycomb on edge against the tabletops and radios. Secure it with 1/2-inch tubular nylon webbing.

10 Place a 15-foot lashing through each of the three pairs of cargo bed tie-down rings in a front-to-rear direction.

11 Place a 15-foot lashing across the width of the cargo bed 38 inches from the front radio equipment rack.

Figure 5-6. Division Assault Command Radio System and Truck Equipment Rigged in M998 Truck (continued)

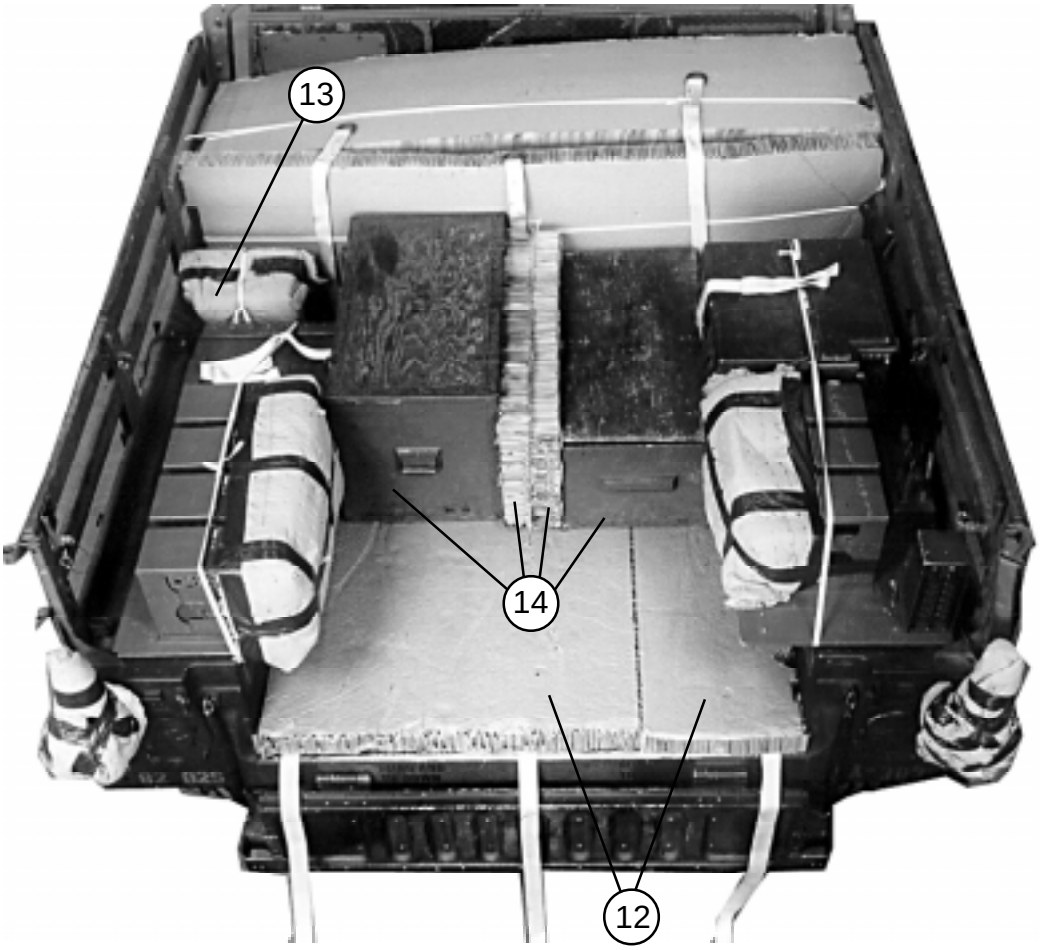

(12) Place a 36- by 59-inch piece of honeycomb and a 15- by 59-inch piece of honeycomb side by side to cover the cargo bed.

(13) Place a 7- by 16-inch piece of honeycomb between the left wheel well and the honeycomb placed in step 9 (not shown). Pad the GRC-46 radio with cellulose wadding. Tape the wadding in place. Lay the radio on its side on the honeycomb placed above. Tie it to convenient points with 1/2-inch tubular nylon webbing.

(14) Place these items in the cargo bed from left to right in order: large radio equipment chest, two 17- by 33-inch pieces of honeycomb placed on edge, and the small radio equipment chest.

Figure 5-6. Division Assault Command Radio System and Truck Equipment Rigged in M998 Truck (continued)

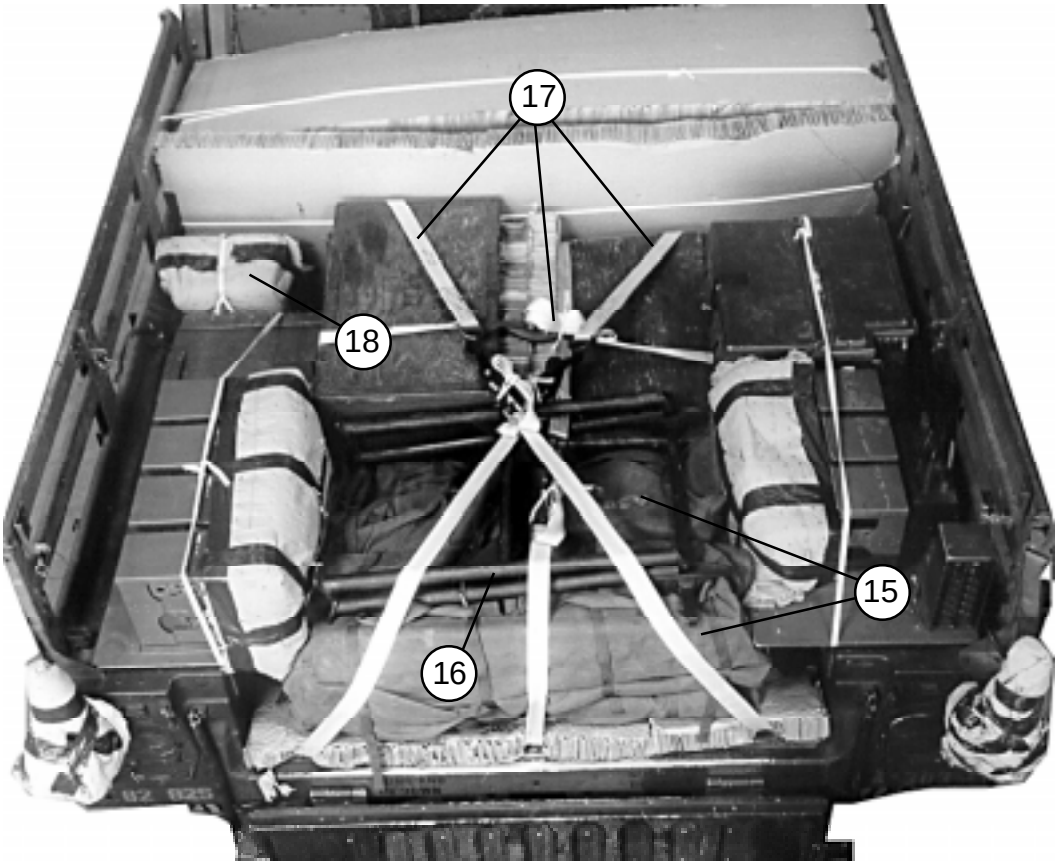

15 Lay four OE 254 antenna sets across the cargo bed.

16 Place the RL-31 rack on top of the antenna bags.

17 Fasten the lashings placed in step 10 using D-rings and load binders. Cross the outer lashings as shown.

18 Fasten the lashing placed in step 11 over the boxes with a D-ring and a load binder.

Figure 5-6. Division Assault Command Radio System and Truck Equipment Rigged in M998 Truck (continued)

Notes: 1. This drawing is not drawn to scale.
2. All dimensions are in inches

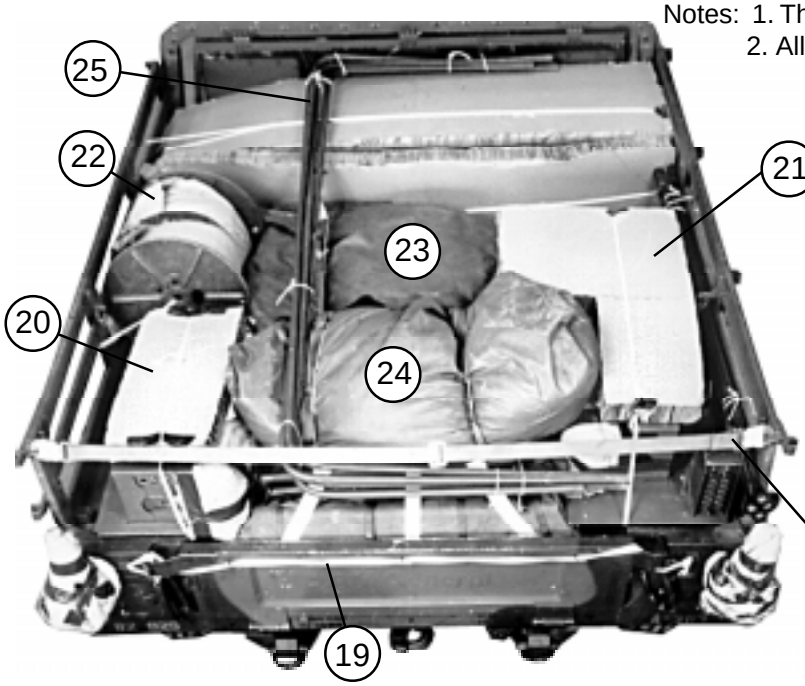

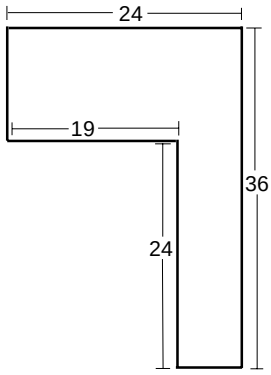

19 Close and tie the tailgate with 1/2-inch tubular nylon webbing.

20 Tie a 12- by 24-inch piece of honeycomb over the left communications security device with type III nylon cord.

21 Make a cutout in a 24- by 36-inch piece of honeycomb as shown. Cover the right radio and communications security device with the honeycomb.

22 Place the reel of WD1A wire on the left wheel well. Tie it to the body side rack as shown with 1/2-inch tubular nylon webbing.

23 Place the truck covers on top of the equipment chests. Tie them to convenient points with type III nylon cord.

24 Place the camouflage net bag on top of the rack unit. Tie the bag to convenient points with type III nylon cord.

25 Tie the bows together and secure them to the load with type III nylon cord.

26 Install the safety strap and tape the latches.

Figure 5-6. Division Assault Command Radio System and Truck Equipment Rigged in M998 Truck (continued)

RIGGING MOBILE SUBSCRIBER RADIO TELEPHONE IN M998 TRUCK

5-8. Use the procedures shown in Figures 5-7 and 5-8 to rig the Mobile Subscriber Radio Telephone Terminal (AN/VRC-97). Rig equipment in addition to the items shown to meet the weight requirement.

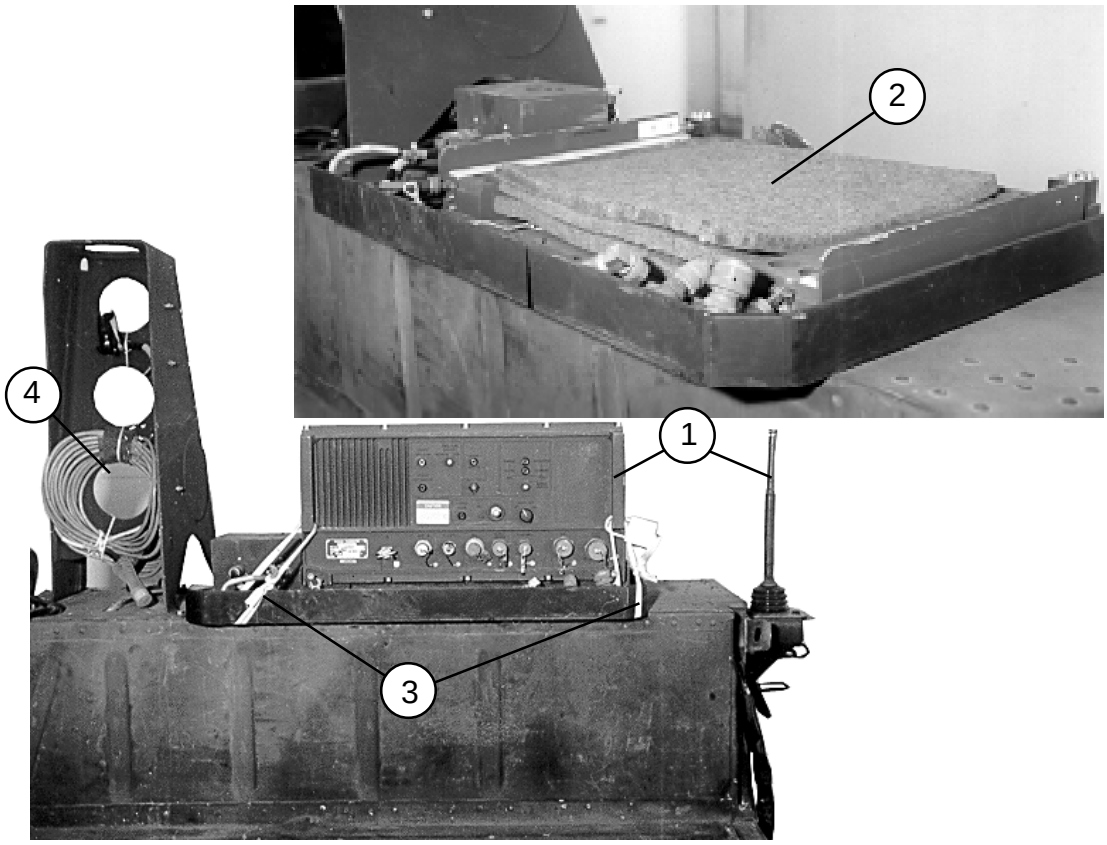

1. Remove the whip antenna from the antenna mount. Remove the receiver/transmitter from its base.
2. Pad the receiver/transmitter mounting bracket with three pieces of 11- by 14 1/2-inch felt.
3. Return the receiver/transmitter to its mount and be sure that the mounting bolts are properly tightened. Secure the receiver/transmitter to its mount with two lengths of 1/2-inch tubular nylon webbing tied to the carrying handles. Tie the nylon webbing with surgeon's and locking knots with overhand knots in the running ends.
4. Secure the frequency fill cable with the hook-and-loop straps provided, and with three lengths of type III nylon cord.

Figure 5-7. Receiver/Transmitter RT-1539 Prepared and Secured

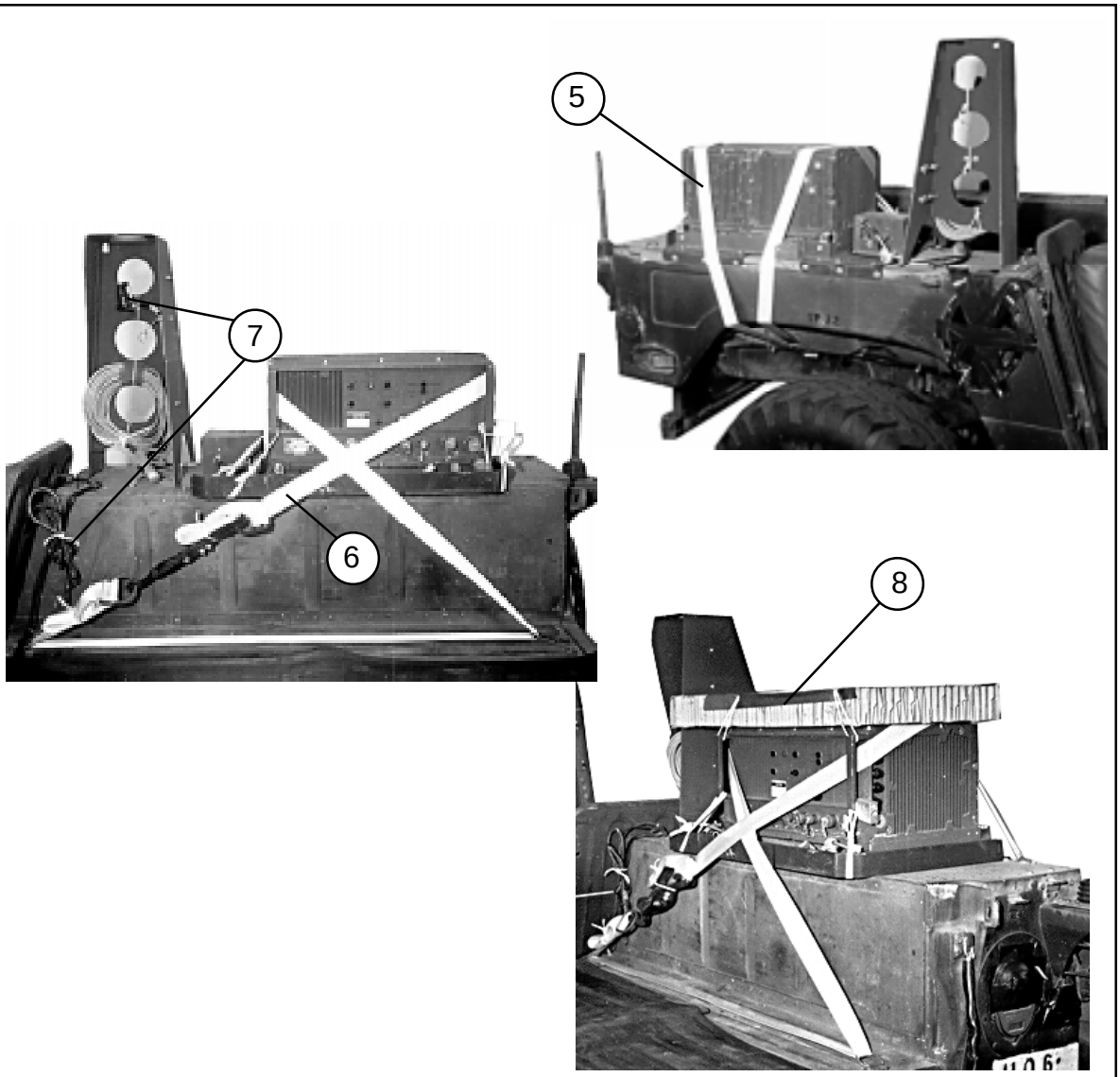

(5) Center a 30-foot lashing through the tie-down provision behind the right rear wheel. Pass both ends of the lashing over the receiver/transmitter and through the carrying handles.

(6) Cross the lashing in front of the receiver/transmitter and pass it through the cargo bed tie-down rings. Secure the lashing with two D-rings and a load binder.

(7) Safety tie any cables to convenient stationary points with type III nylon cord.

(8) Place a 15- by 30-inch piece of honeycomb on top of the receiver/transmitter. Tape the upper 30-inch sides of the honeycomb. Secure the honeycomb to the receiver/transmitter with type III nylon cord. Run the cord over the honeycomb from the right carrying handle to the left rear mounting bracket, and from the left carrying handle to the right rear mounting bracket.

Figure 5-7. Receiver/Transmitter RT-1539 Prepared and Secured (continued)

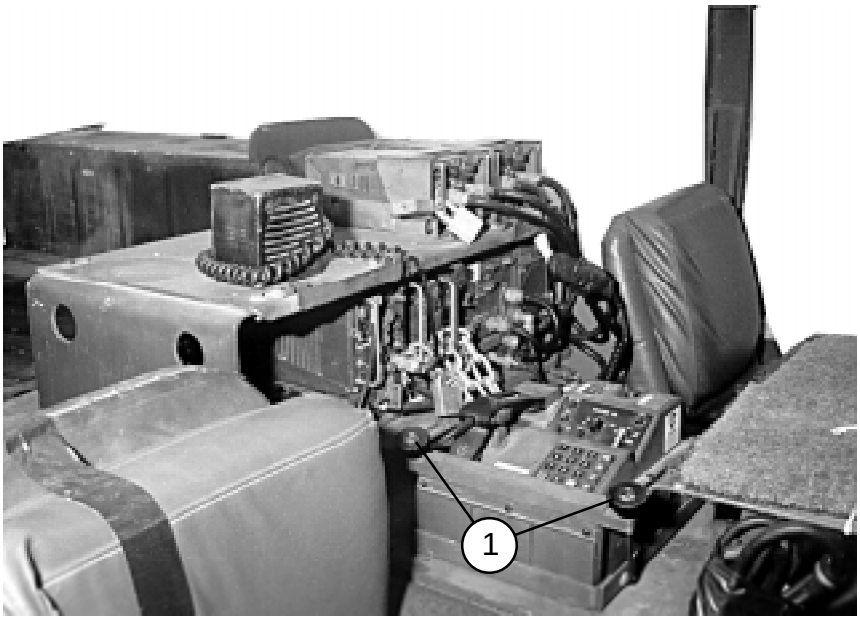

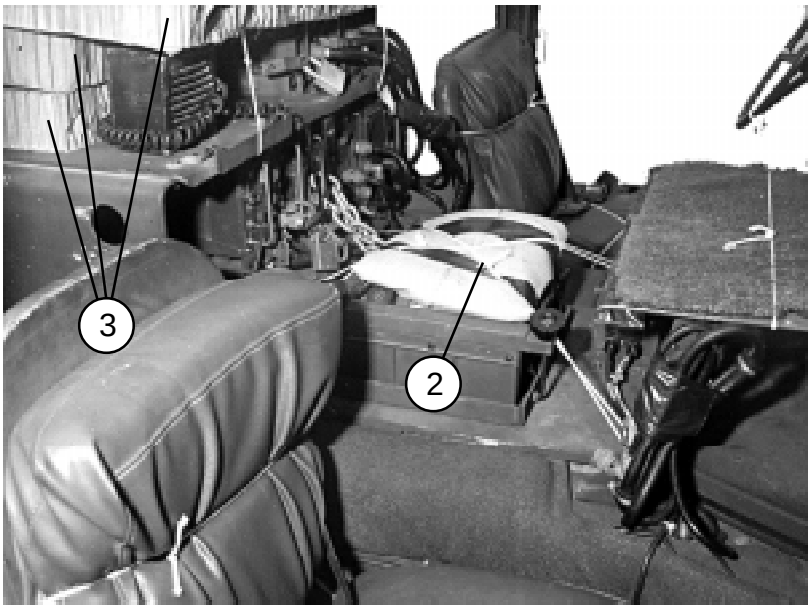

1. Secure the digital subscriber voice terminal (DSVT) in the bracket between the seats with its mounting bolts.

2. Make a pad of the upper dimensions of the DSVT with cellulose wadding covered with tape. Secure the pad to the DSVT with two lengths of type III nylon cord tied to convenient stationary points.

3. Cut a piece of honeycomb to fit the top of the remaining DSVT components. Cut smaller pieces of honeycomb to support the top piece. Tie the honeycomb to the mounts with type III nylon cord.

Figure 5-8. Digital Subscriber Voice Terminal (KY-68) Components Prepared and Secured

RIGGING LIGHTWEIGHT TACTICAL FIRE DIRECTION CONTROL SYSTEM (LTACFIRE) IN M998 TRUCK

5-9. Use the procedures shown in Figure 5-9 to rig the components of the LTACFIRE and accompanying equipment. The LTACFIRE system consists of a syncgar radio system mounted in a rack. The upper rack has a program load unit (PLU), a power distribution box (PDB), and a digitizer mounted in it. The printer and monitor have their own containers. A keyboard requires a container to be made of honeycomb. Miscellaneous items include, but are not limited to, a map board, field desk, footlocker, camouflage net and poles, and two folding chairs.

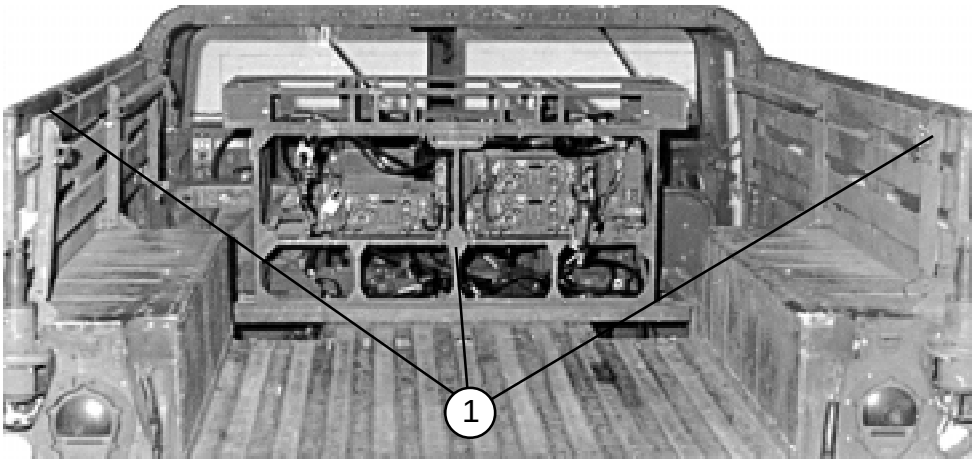

1 Remove all components of the LTACFIRE system and accompanying equipment from the truck except the sincgar radios mounted in their rack bolted to the bed of the carrier. Raise and secure the left and right side troop seats.

Figure 5-9. LTACFIRE and Accompanying Equipment Rigged in M998 Truck

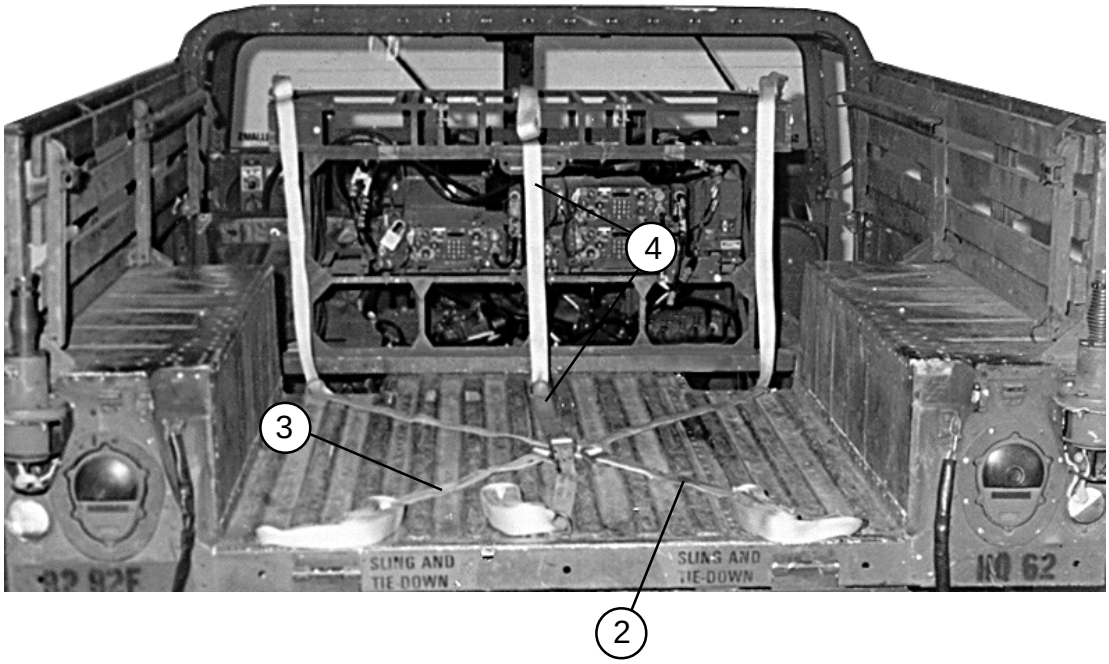

(2) Place a 30-foot lashing through the right rear cargo bed tie-down ring and the left front cargo bed tie-down ring. Place the joined D-rings at the center of the cargo bed.

(3) Place another 30-foot lashing as outlined in step 2, but from the left rear to the right front cargo bed tie-down ring.

(4) Place another 30-foot lashing with the joined D-rings in the center of the bed. Run the lashing through the front and rear center tie-down rings, and up over the radio rack.

Figure 5-9. LTACFIRE and Accompanying Equipment Rigged in M998 Truck (continued)

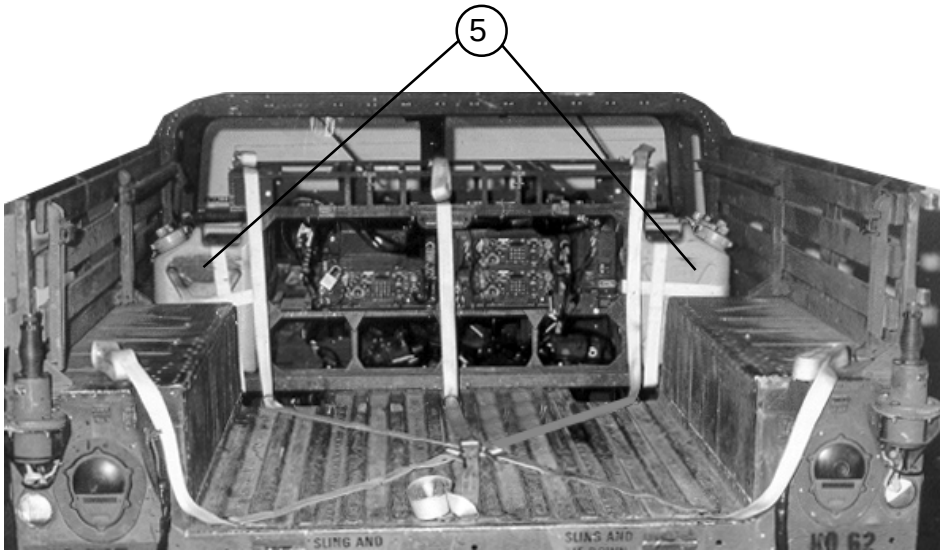

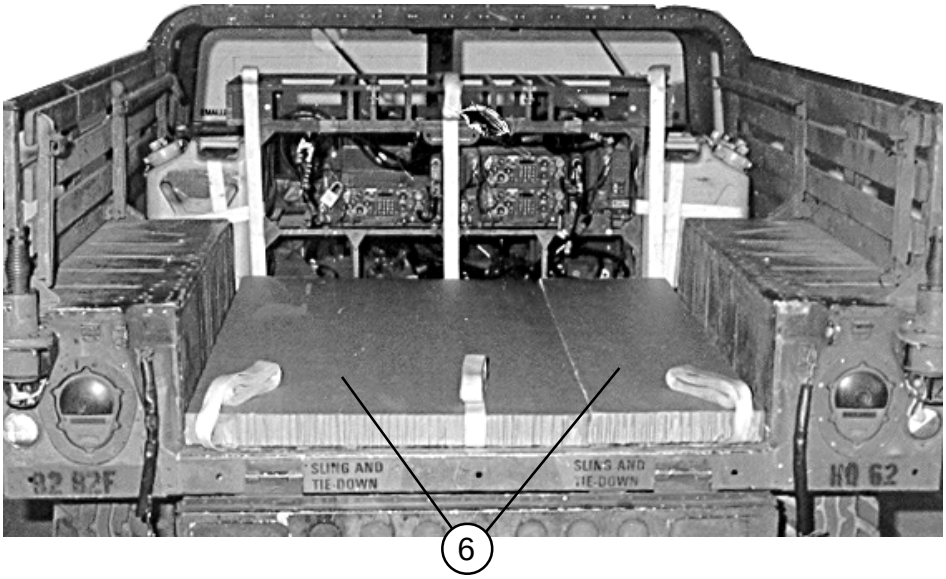

(5) Bind three 5-gallon cans together with 15-foot lashings. Secure a group of three cans to the radio rack on each side with a 15-foot lashing. Place the load binders on the front side.

(6) Cover the cargo bed with a single layer of honeycomb.

Figure 5-9. LTACFIRE and Accompanying Equipment Rigged in M998 Truck (continued)

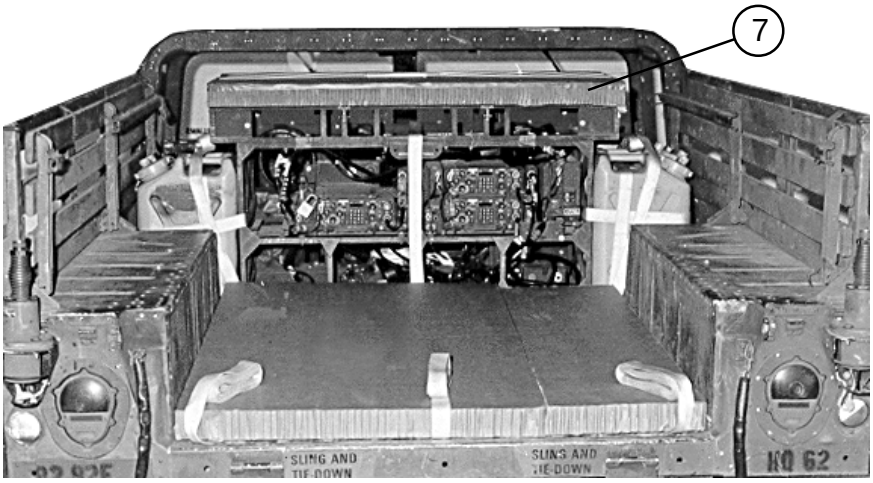

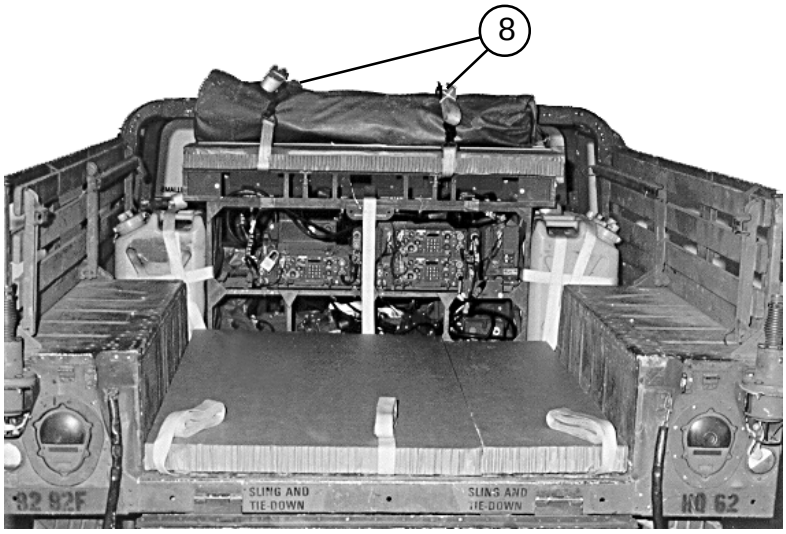

(7) Move any prepositioned lashings aside, and place a 24- by 54-inch piece of honeycomb on top of the radio rack and secure it with type III nylon cord.

(8) Place one camouflage net pole bag on top of the honeycomb placed in step 7 above. Secure the bag to the radio rack with two 15-foot lashings.

Figure 5-9. LTACFIRE and Accompanying Equipment Rigged in M998 Truck (continued)

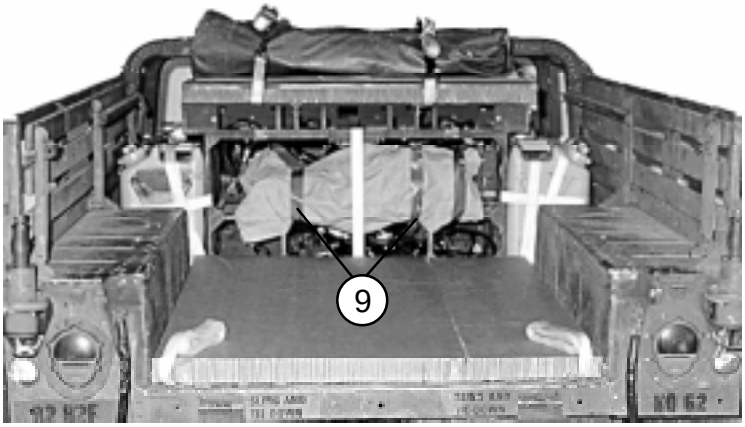

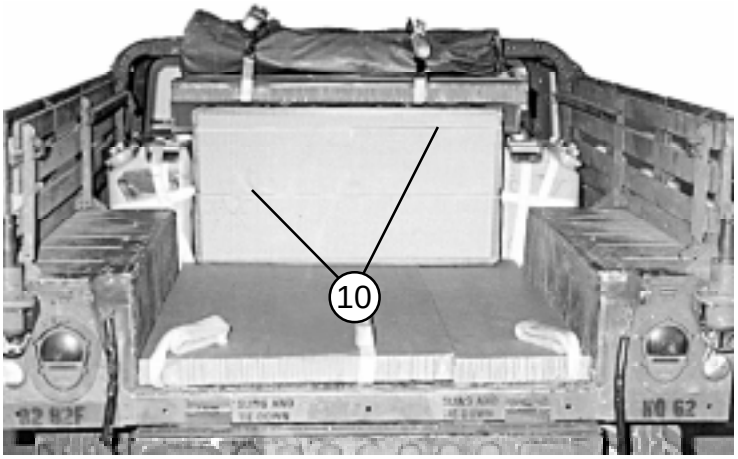

9 Pad the radio with cellulose wadding. Tape the wadding in place.

10 Place a 24 1/2- by 47-inch piece of honeycomb against the radio rack and secure it in place with type III nylon cord.

Figure 5-9. LTACFIRE and Accompanying Equipment Rigged in M998 Truck (continued)

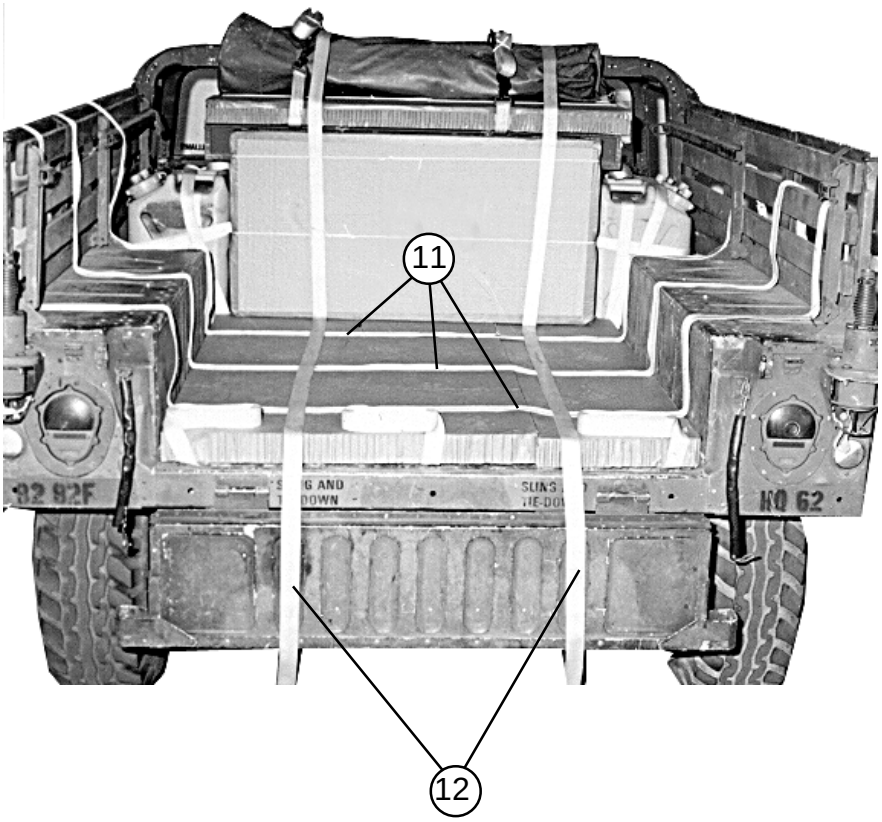

(11) Place three 15-foot lashings evenly spaced from right to left on the honeycomb placed in step 6.

(12) Place two more 15-foot lashings on the honeycomb running from front to rear.

Figure 5-9. LTACFIRE and Accompanying Equipment Rigged in M998 Truck (continued)

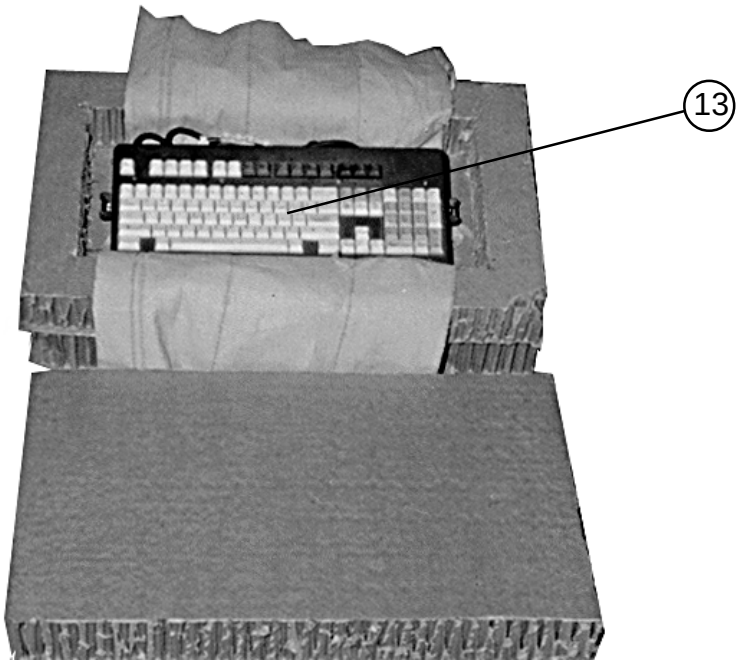

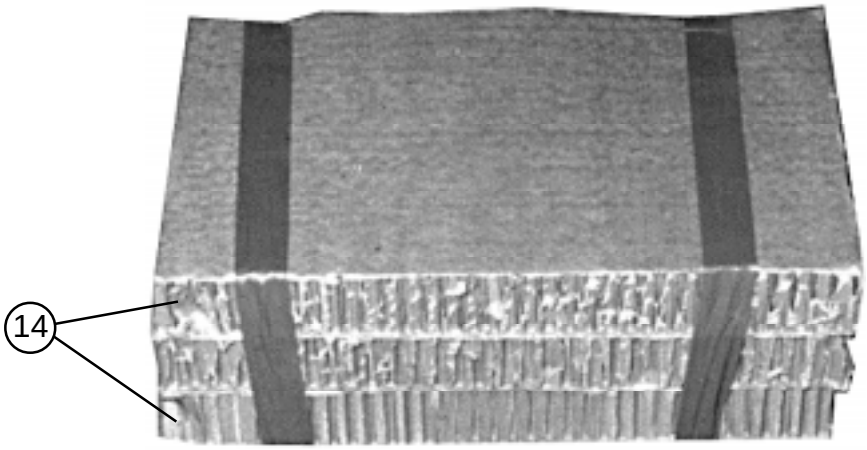

(13) Build a container for the keyboard with three 16- by 26-inch pieces of honeycomb. Center a 10 1/2- by 20 1/2-inch hole in the center piece, wrap the keyboard with cellulose wadding, and place the keyboard in the cutout.

(14) Tape the solid pieces of honeycomb to the top and bottom of the container.

Figure 5-9. LTACFIRE and Accompanying Equipment Rigged in M998 Truck (continued)

(15) Place the monitor in its container and close the latch.

(16) Place the printer in its container and close the latch.

Figure 5-9. LTACFIRE and Accompanying Equipment Rigged in M998 Truck (continued)

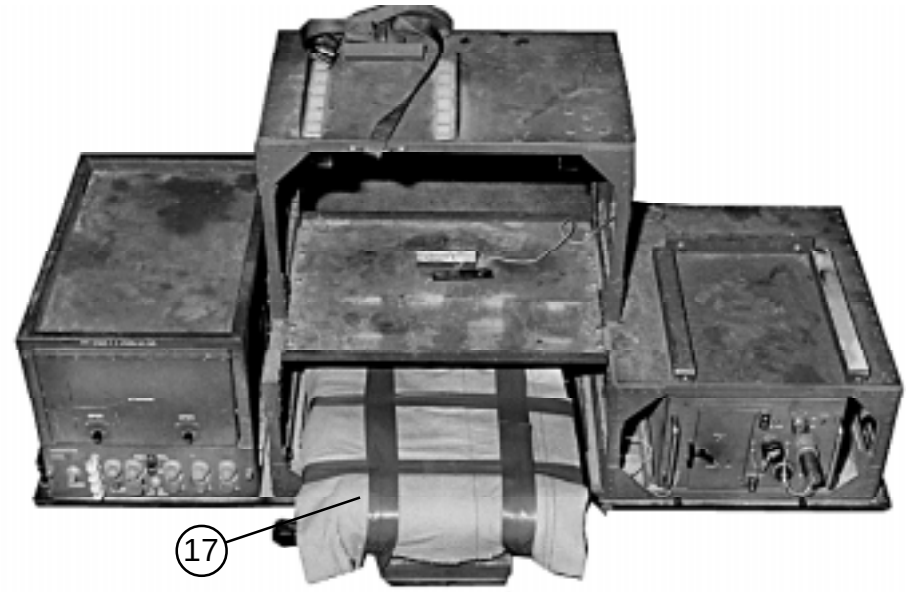

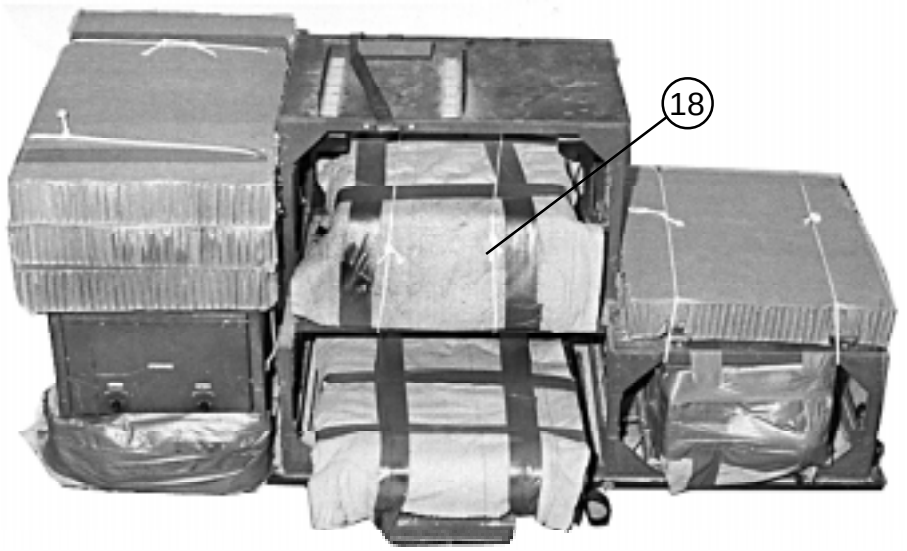

(17) Turn the digitizer around in the upper rack, pad it with cellulose wadding, and secure the wadding with tape.

Note: This rack is not installed in the truck at this time.

(18) Cover the printer cover with cellulose wadding, and place it in the center space on the rack. Secure it to the rack with type III nylon cord.

Figure 5-9. LTACFIRE and Accompanying Equipment Rigged in M998 Truck (continued)

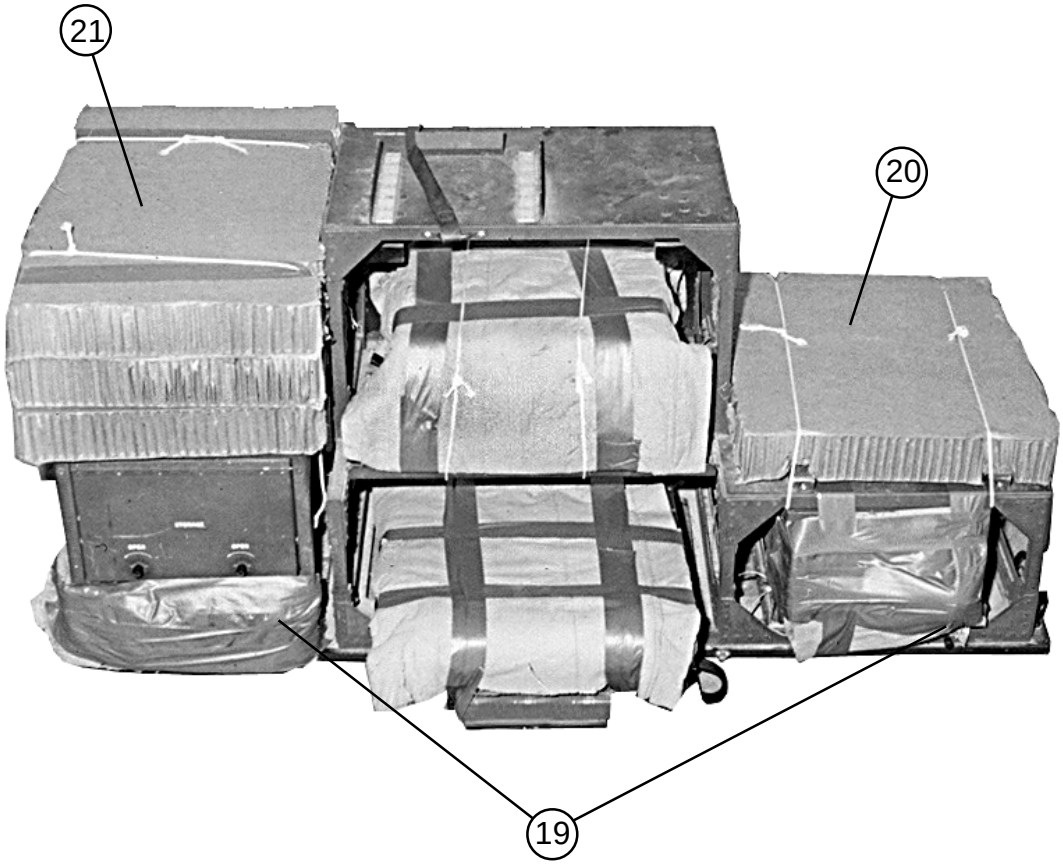

19 Pad the face of the PDB and the PLU with cellulose wadding taped in place.

20 Place a 17- by 19 1/2-inch piece of honeycomb on top of the PLU. Crush the honeycomb to allow for the printer mount and tie the honeycomb to the PLU with type III nylon cord.

21 Place the keyboard container made in steps 13 and 14 on top of the PDB, and tie it in place with type III nylon cord.

Figure 5-9. LTACFIRE and Accompanying Equipment Rigged in M998 Truck (continued)

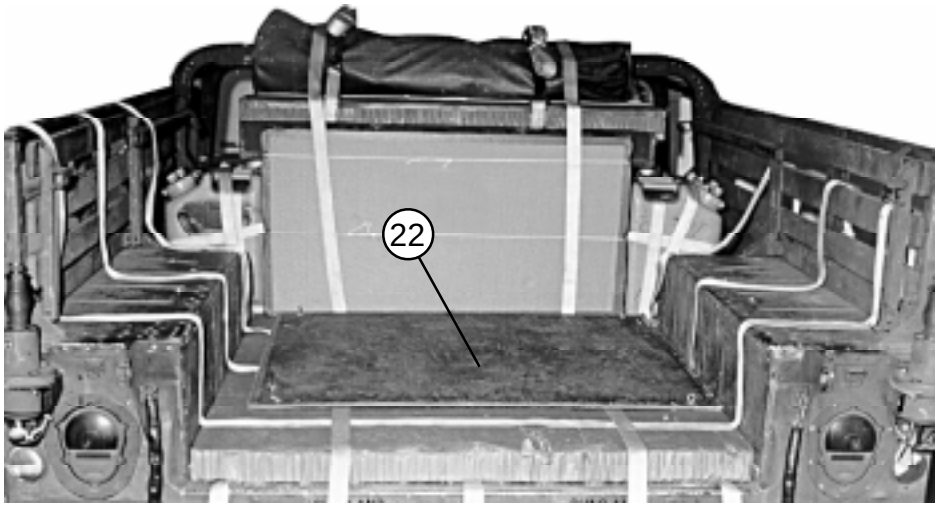

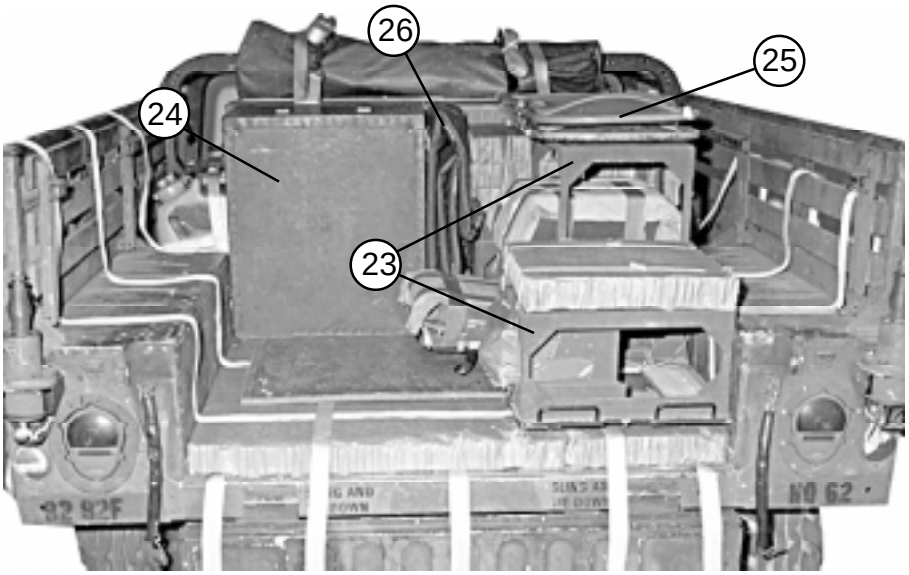

(22) Place the map board face down on the honeycomb in the truck cargo bed.

(23) Place the upper rack in the truck cargo bed as shown.

(24) Place one field desk in the truck cargo bed.

(25) Place the two folding chairs on the upper rack.

(26) Place the truck cab cover between the field desk and upper rack.

Figure 5-9. LTACFIRE and Accompanying Equipment Rigged in M998 Truck (continued)

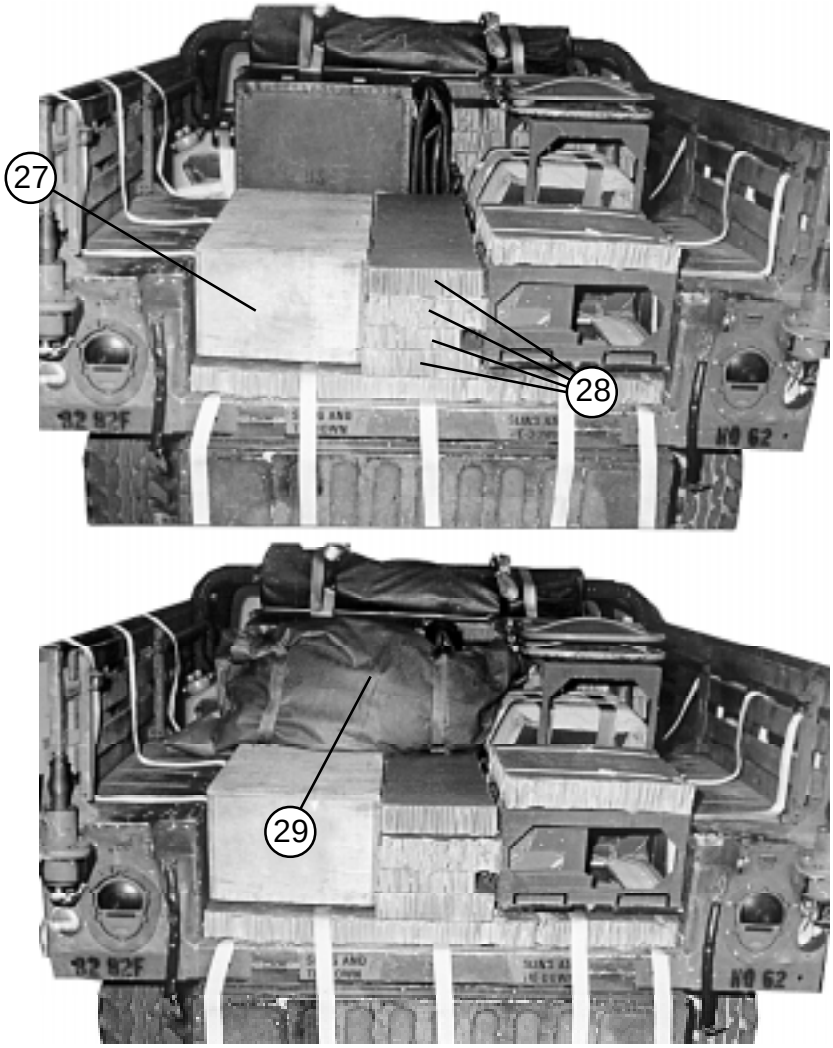

27 Place the footlocker (containing antenna mounts and any other small items) in the cargo bed.

28 Fill the space between the footlocker and the PLU section of the upper rack with four pieces of honeycomb cut to fit.

29 Place the camouflage net bag on the footlocker and honeycomb, against the field desk.

Figure 5-9. LTACFIRE and Accompanying Equipment Rigged in M998 Truck (continued)

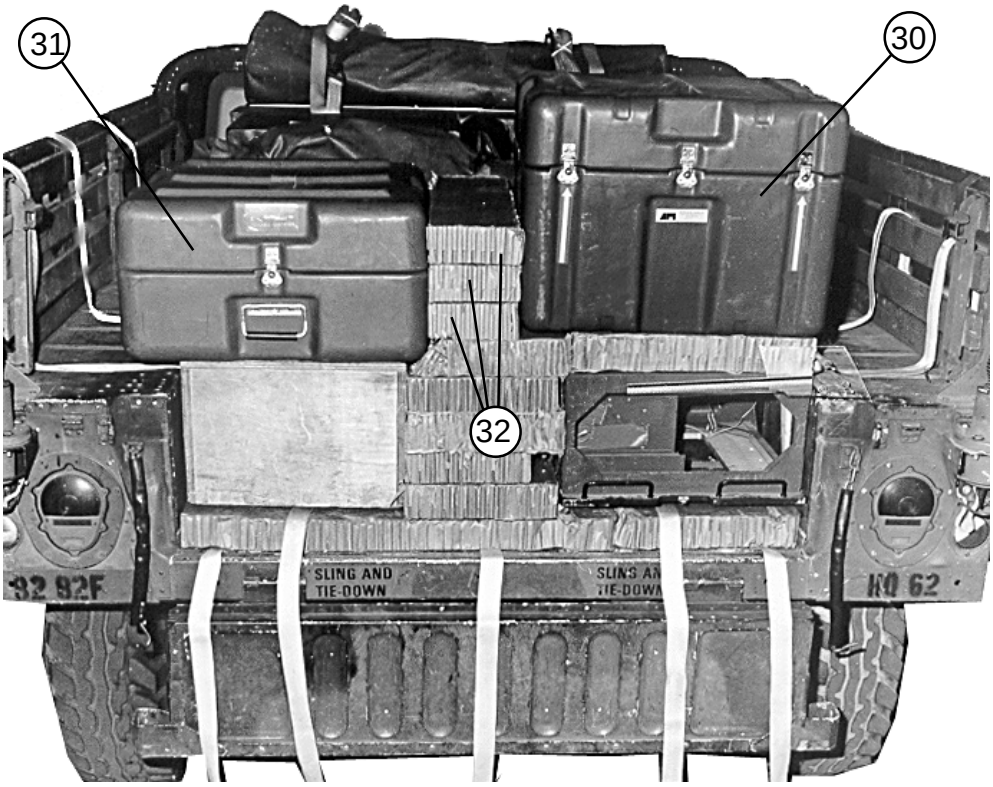

(30) Place the monitor case on the upper rack.

(31) Place the printer case on the footlocker.

(32) Fill the space between the printer and monitor cases with three pieces of honeycomb cut to fit.

(33) Tape the antennas together and tie them to the upper radio rack with type III nylon cord (not shown).

Figure 5-9. LTACFIRE and Accompanying Equipment Rigged in M998 Truck (continued)

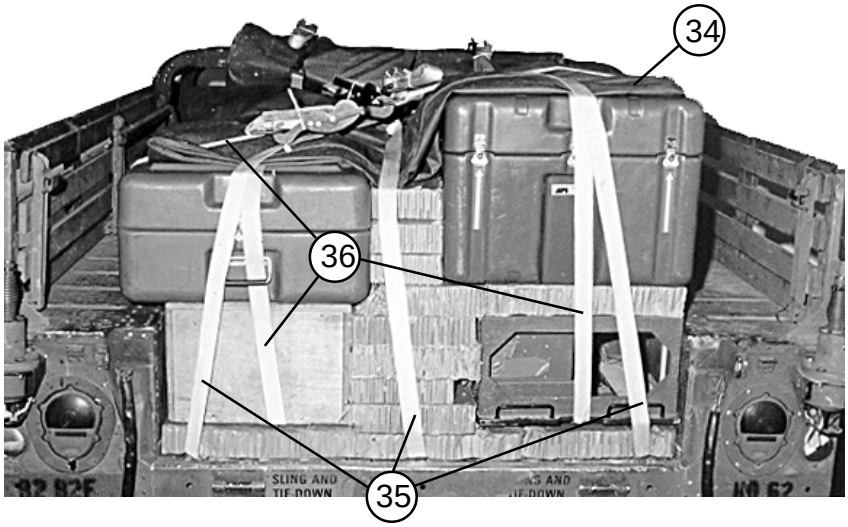

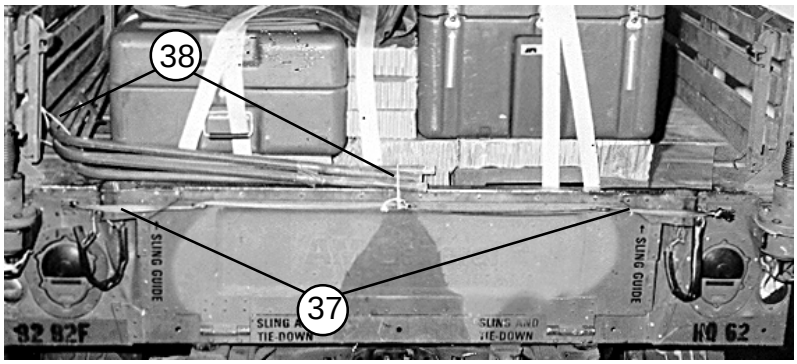

(34) Cover the items with the folded truck cargo bed cover.

(35) Secure the three lashings pre-positioned under the honeycomb in steps 2 through 4 over the load.

(36) Secure the lashings placed in steps 11 and 12 over the load, passing them through box carrying handles whenever possible.

(37) Close the tailgate and secure it with 1/2-inch tubular nylon webbing.

(38) Tie the bows together and secure them to convenient points with type III nylon cord.

Figure 5-9. LTACFIRE and Accompanying Equipment Rigged in M998 Truck (continued)

RIGGING INITIAL FIRE SUPPORT AUTOMATED SYSTEM (IFSAS) IN M998 TRUCK

5-10. Use the procedures shown in Figure 5-10 to rig the IFSAS in a cargo/troop carrier-configured truck. An additional 500 pounds of equipment must be added to the items shown to meet the minimum weight requirement of 800 pounds for the accompanying load. Boxes of 105-millimeter ammunition are shown here, but other items weighing the same or more may be used.

1 Place the computer unit in its soft carrying bag. Place the bag in the hard case and secure the case.

Figure 5-10. IFSAS Rigged in M998 Truck

2 Place the printer and the paper tray in the soft carrying bag. Place the bag in the hard case and secure the case.

3 Place the power supply and the power cable in the soft carrying bag. Place the bag in the hard case and secure the case.

Figure 5-10. IFSAS Rigged in M998 Truck (continued)

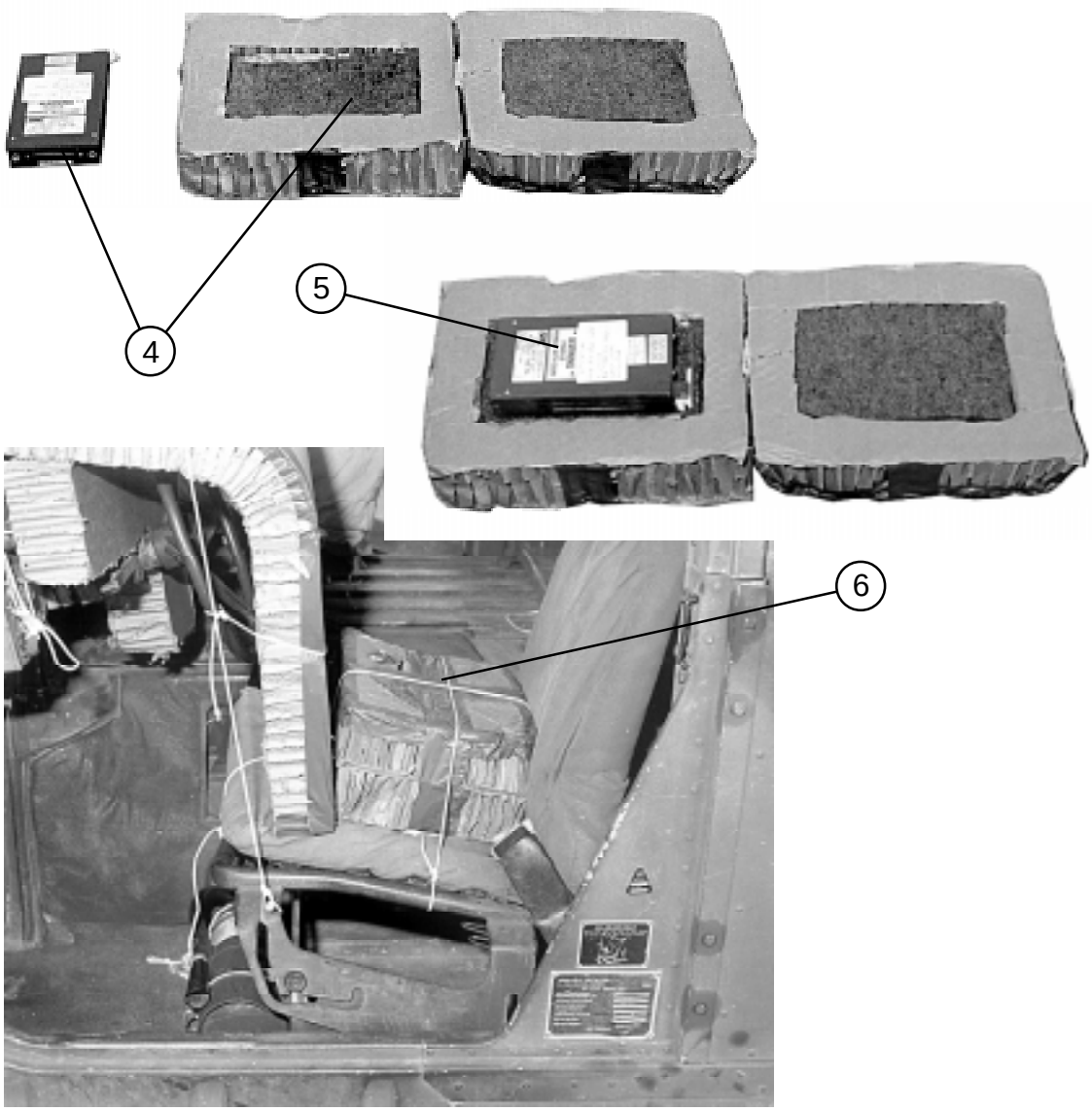

4 Center an indentation with the dimensions of the hard drive in two 8- by 12-inch pieces of honeycomb. Place felt or a cellulose wadding pad of the same dimensions in each indentation.

5 Place the hard drive in the indentations and tape the second piece of honeycomb over the first as a cover.

6 Tie the hard drive box to the seat frame with type III nylon cord.

Figure 5-10. IFSAS Rigged in M998 Truck (continued)

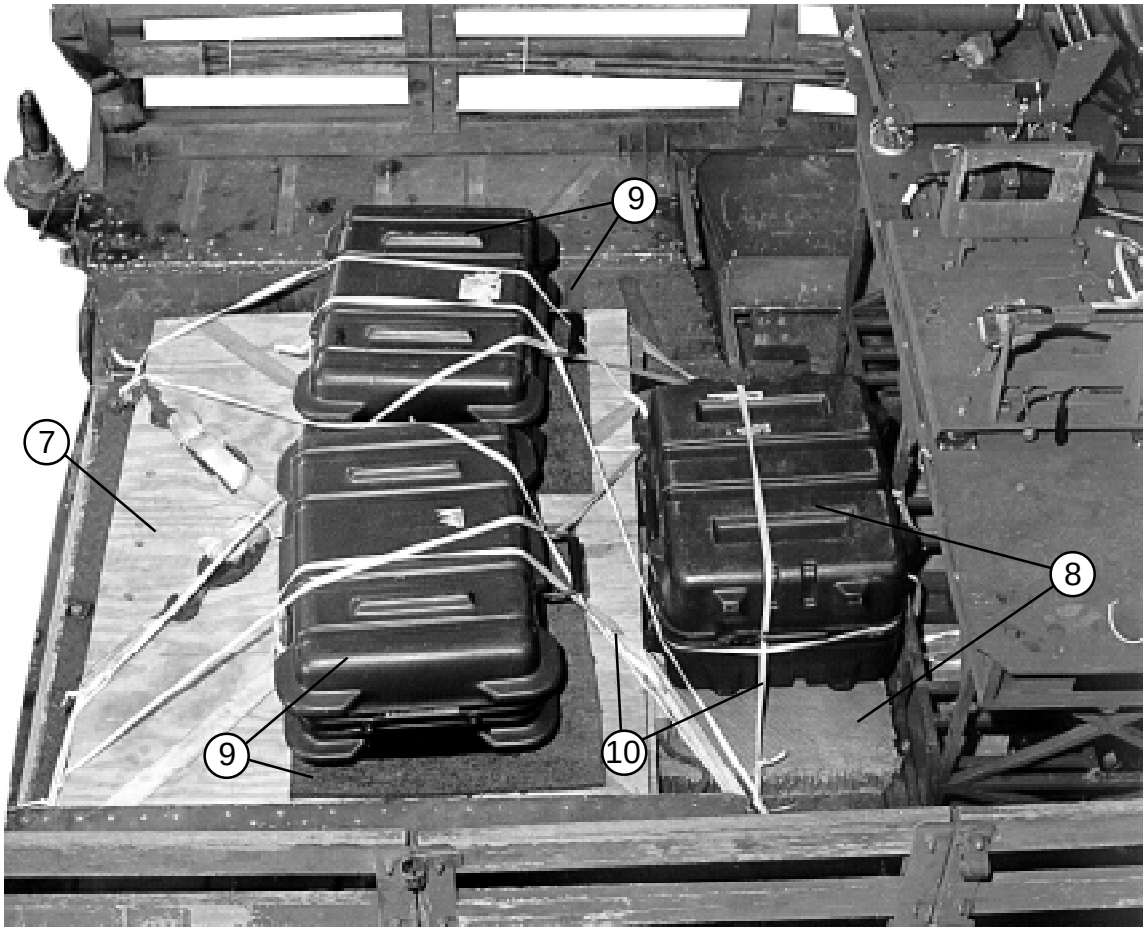

(7) Stow unit equipment or ballast sufficient to meet the minimum load weight of 800 pounds. Boxes of ammunition are placed on a layer of honeycomb and under the plywood shown in this figure.

(8) Place a 16- by 36-inch piece of honeycomb on the floor between the ammunition boxes and the front equipment racks. Center the computer case on the honeycomb with the handle facing the front.

(9) Evenly space two 19- by 21-inch pieces of felt 6 inches from the front edge of the plywood. Place the two remaining hard cases on the felt with the carrying handles facing the front.

(10) Secure the cases to tie-down rings and equipment racks with 1/2-inch tubular nylon webbing. Pass the webbing through the case carrying handles whenever possible.

(11) Stow additional unit equipment as the mission dictates and according to FM 4-20.102/TO 13C7-1-5. Cover the load with a canvas load cover secured to convenient points with type III nylon cord.

Figure 5-10. IFSAS Rigged in M998 Truck (continued)

RIGGING SEMI-AUTOMATIC METEOROLOGICAL SENSOR (SMS) IN M998 TRUCK

5-11. Use the procedures shown in Figure 5-11 to rig the SMS in a cargo/troop carrier-configured truck. Additional equipment must be added to the items shown to meet the minimum weight requirement of 800 pounds for the accompanying load.

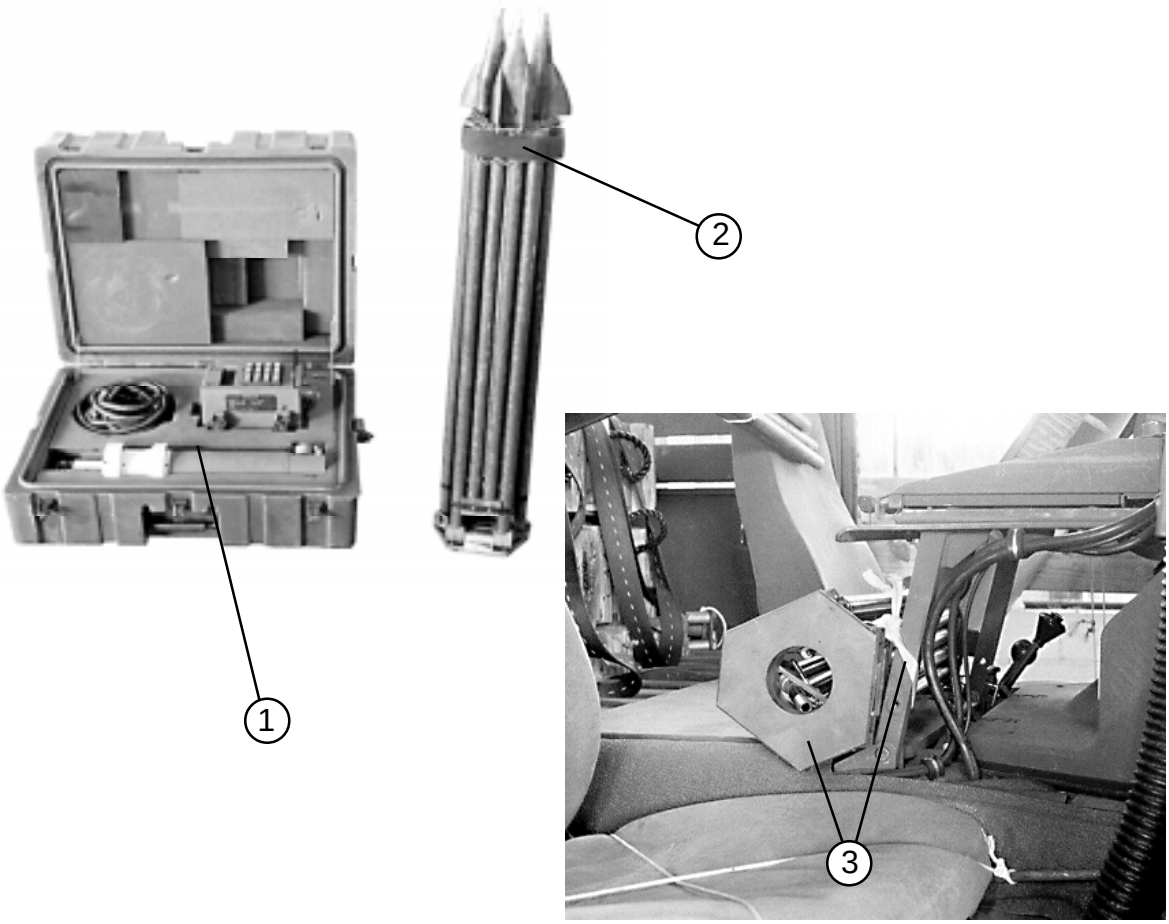

1. With the assistance of the unit owning the SMS, be sure that the SMS is complete and properly padded in its case.
2. Fold the tripod and secure its parts together with the straps provided.
3. Tie the tripod to the rear of the cab radio mount with 1/2-inch tubular nylon webbing.

Figure 5-11. Rigging SMS in Cargo/Troop Carrier

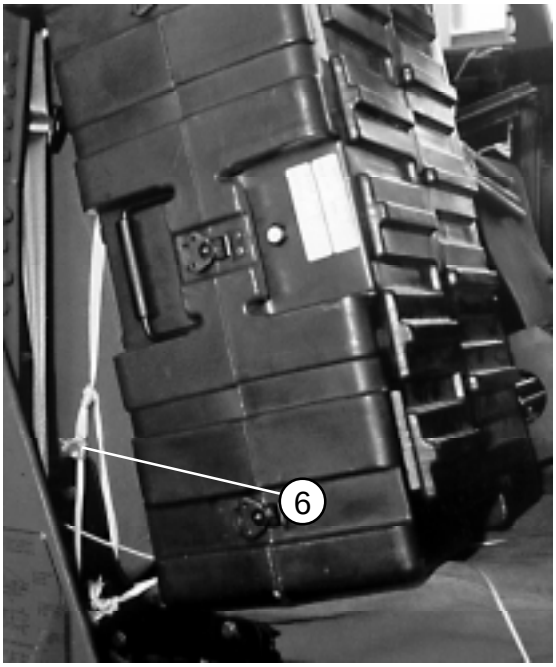

(4) Place the SMS case on the passenger seat with the top carrying handle facing toward the passenger door.

(5) Route two lengths of 1/2-inch tubular nylon webbing through the carrying handle that is now on the case bottom. Tie each length of webbing to the passenger seat frame on each side.

(6) Tie two lengths of 1/2-inch tubular nylon webbing to the top case handle. Secure this nylon webbing to the passenger seat frame on each side with a trucker's hitch.

Figure 5-11. Rigging SMS in Cargo/Troop Carrier (continued)

7 Tie two lengths of 1/2-inch tubular nylon webbing around the case and the seat back. Tie one length above the outside carrying handle, and tie the other length through the carrying handle.

Figure 5-11. Rigging SMS in Cargo/Troop Carrier (continued)

RIGGING GUN LAYING POSITIONING SYSTEM (GLPS) IN M998 TRUCK

5-12. Use the procedures shown in Figure 5-12 to rig the GLPS in a cargo/troop carrier-configured truck (the M1056 truck outfitted as an artillery prime mover is shown). The GLPS consists of four components, each in its own case. The components are the gyro, theodolite, charger, and winterization kit. Additional equipment must be added to the items shown to meet the minimum weight requirement of 800 pounds for the accompanying load.

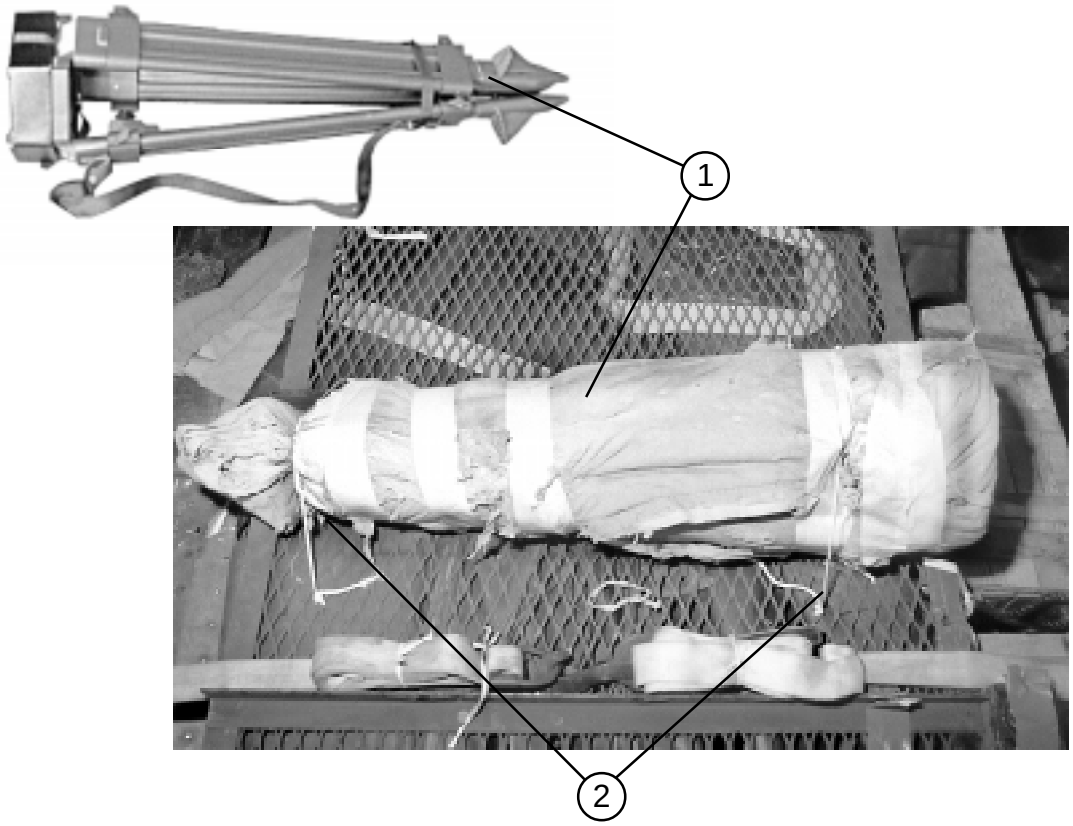

1. Wrap the tripod with cellulose wadding. Tape the wadding in place.
2. Tie the tripod to the truck cargo bed rack with type III nylon cord.

Figure 5-12. GLPS Rigged in M1056 Truck

Case 1 Gyro

Case 2 Theodolite

Case 3 Charger

Case 4 Winterization Kit

(3) With the assistance of the unit owning the equipment, be sure the individual components are complete and cushioned in their cases.

Figure 5-12. GLPS Rigged in M1056 Truck (continued)

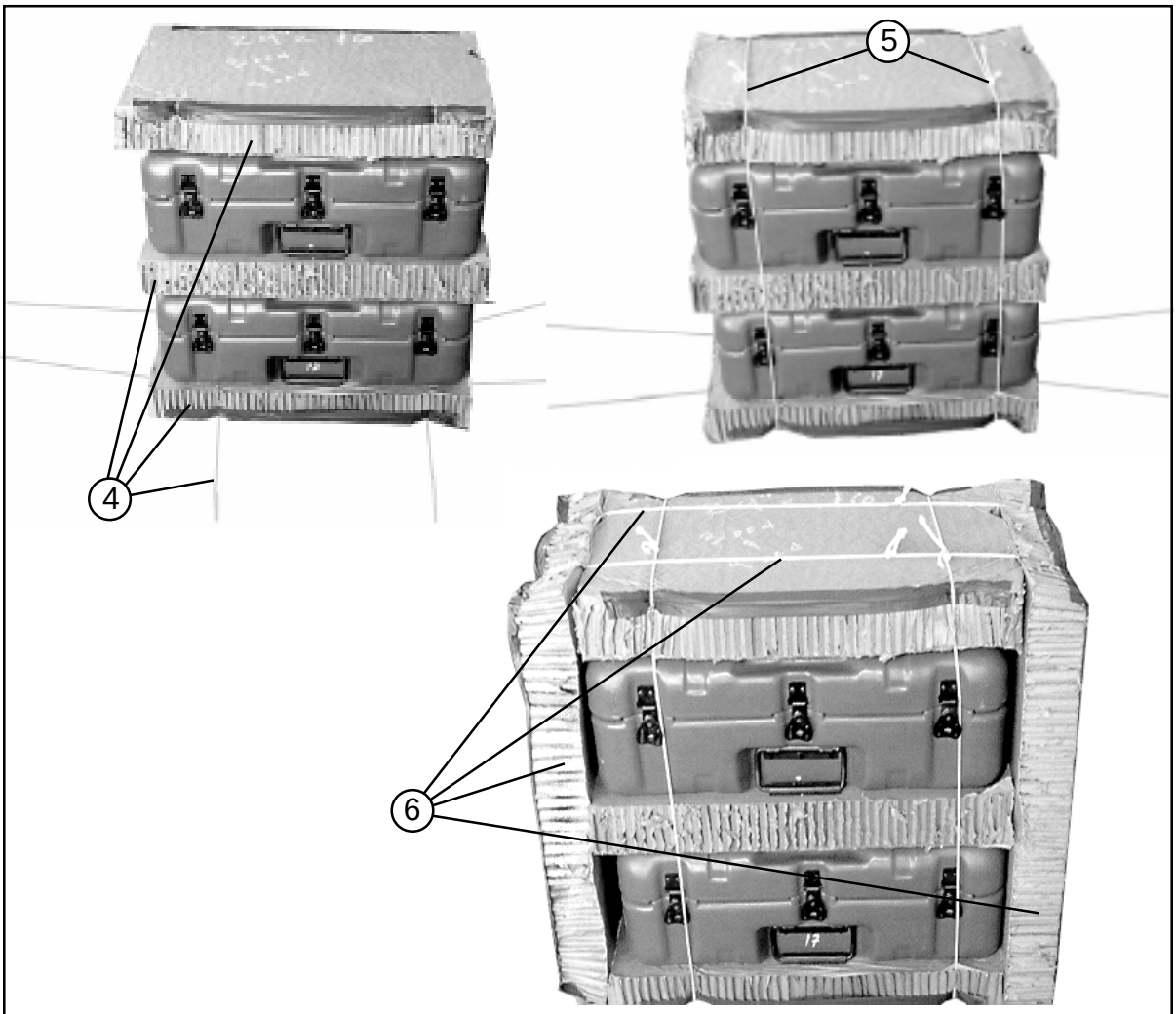

(4) Alternate three 24- by 16-inch pieces of honeycomb with cases 3 and 4 as shown. Tape the outside long edges of the honeycomb. Place type III nylon cord of sufficient length for ties under the stack.

(5) Secure the front-to-rear ties around the cases and honeycomb.

(6) Place a 26- by 16-inch piece of honeycomb against each side of the stack. Tape the outside top and bottom edges of the honeycomb. Secure the honeycomb to the sides of the cases with the remaining lengths of type III nylon cord.

Figure 5-12. GLPS Rigged in M1056 Truck (continued)

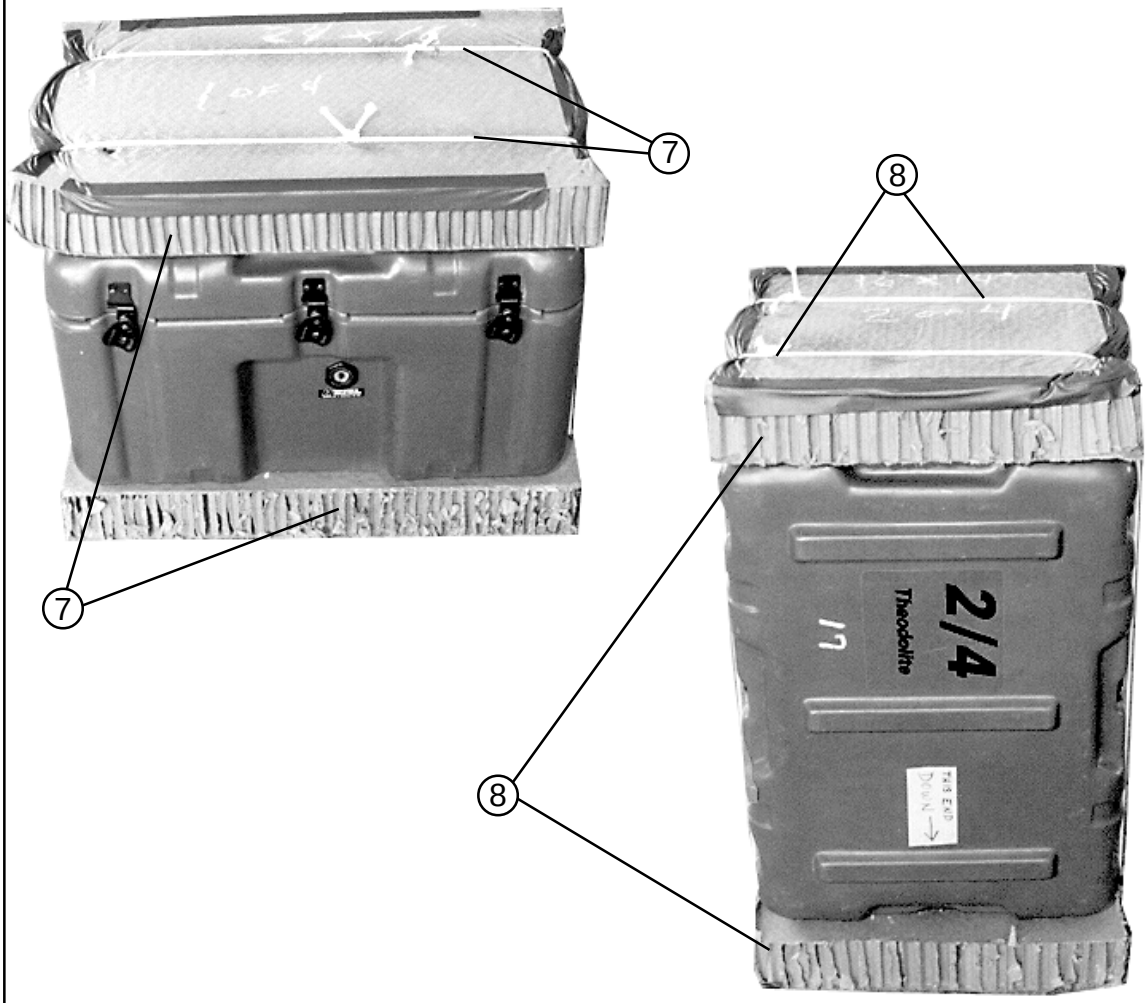

(7) Place a 26- by 16-inch piece of honeycomb over two lengths of type III nylon cord placed lengthwise. Place case 1 and an additional 26- by 16-inch piece of honeycomb on top of the bottom piece. Tape the outside edges of the honeycomb and tie the type III nylon cord over the package.

(8) Place case 2 on end as shown and leave it in this position. Place a 16- by 14-inch piece of honeycomb over two lengths of type III nylon cord placed lengthwise. Place case 2 and an additional 16- by 14-inch piece of honeycomb on top of the bottom piece. Tape the outside edges of the honeycomb and tie the type III nylon cord over the package.

Figure 5-12. GLPS Rigged in M1056 Truck (continued)

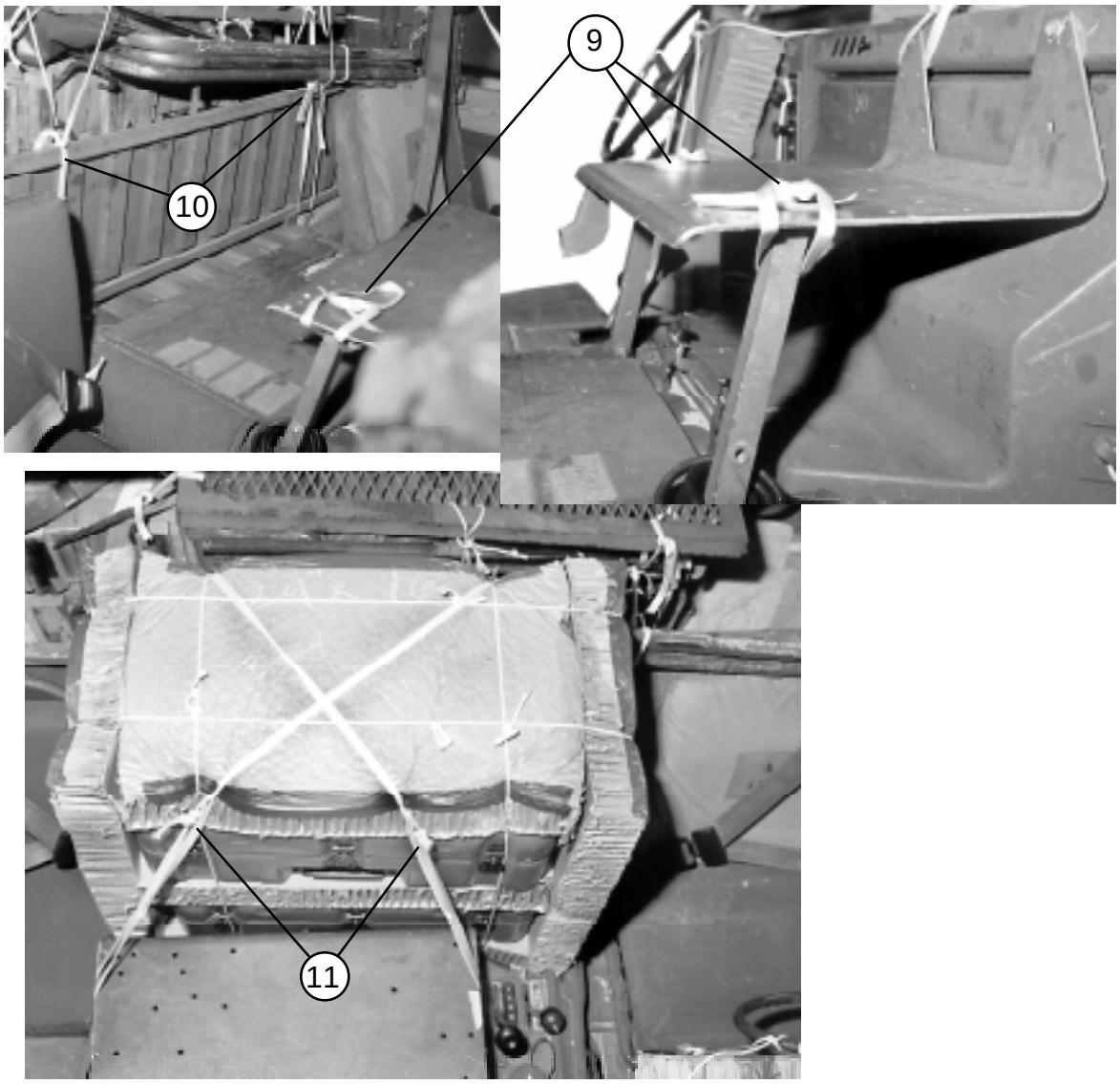

(9) Tie two loops of 14-inch lengths of 1/2-inch tubular nylon webbing to the radio mount supports.

(10) Tie a 10-foot length of 1/2-inch tubular nylon webbing to each of the tie provisions on the front edge of the cargo bed.

(11) Place cases 3 and 4 to the rear of the radio mount. Tie the 1/2-inch tubular nylon webbing placed in step 10 above to the loops placed in step 9 above, crossing over the boxes as shown. Tie off with a trucker's hitch.

Figure 5-12. GLPS Rigged in M1056 Truck (continued)

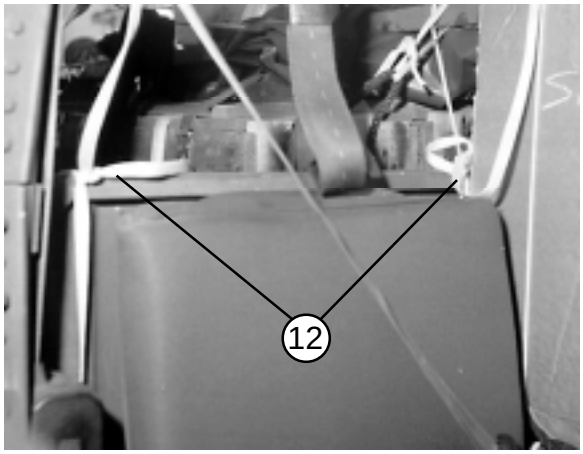

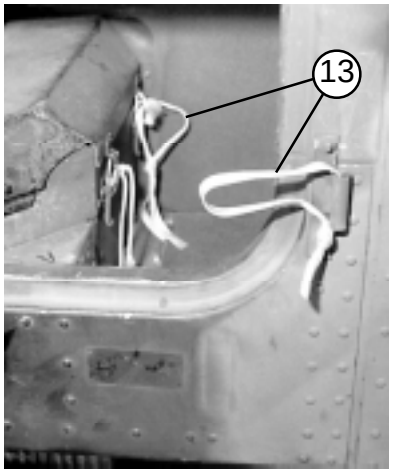

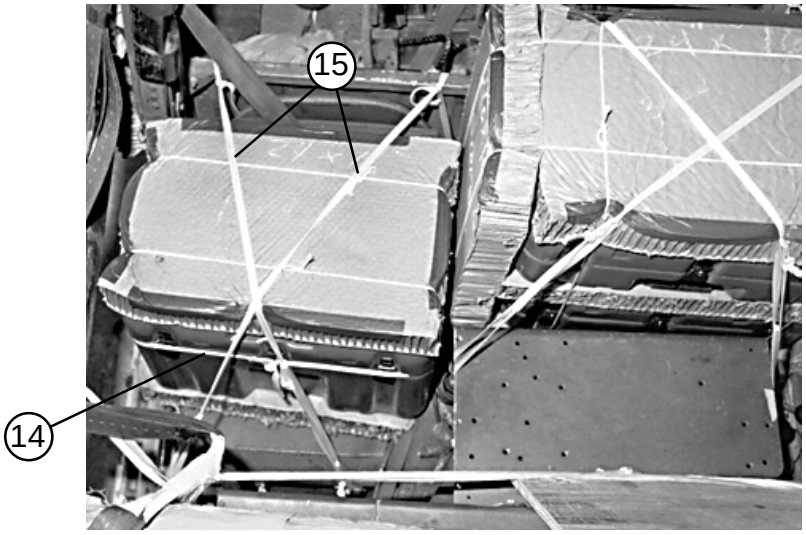

(12) Tie two 10-foot lengths of 1/2-inch tubular nylon webbing to points behind the passenger seat.

(13) Form a 14-inch loop of 1/2-inch tubular nylon webbing through the lower passenger side door hinge. Form a second 14-inch loop of 1/2-inch tubular nylon webbing through the inside passenger seat hinge.

(14) Place case 1 in the passenger seat, and tie the case to the seat back with a length of 1/2-inch tubular nylon webbing.

(15) Tie the 1/2-inch tubular nylon webbing placed in step 12 above to the loops placed in step 13 above, crossing over the boxes as shown. Tie off with a trucker's hitch.

Figure 5-12. GLPS Rigged in M1056 Truck (continued)

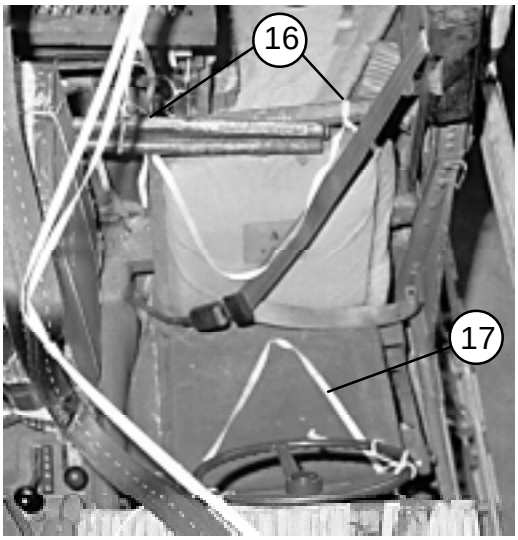

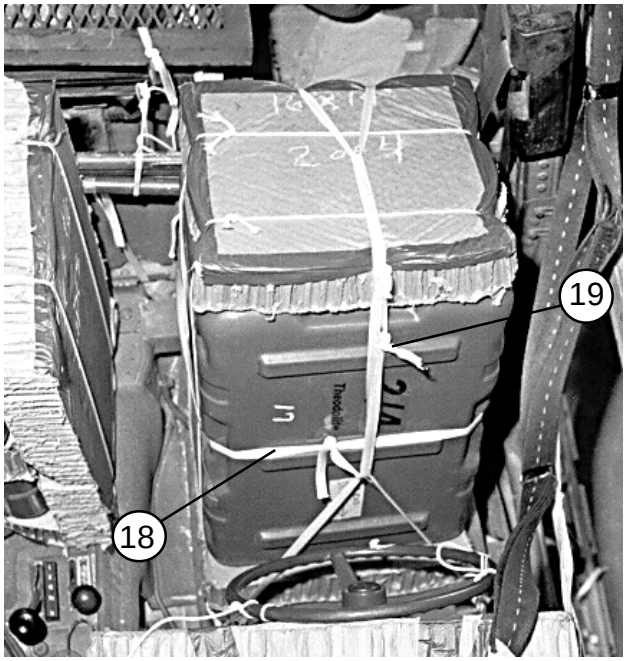

(16) Tie a length of 1/2-inch tubular nylon webbing to the front cargo bed wall behind the driver's seat in two places, forming a loop as shown.

(17) Tie a length of 1/2-inch tubular nylon webbing to the front of the seat frame, forming a loop as shown.

(18) Place case 2 arrow side down in the driver's seat. Place the loops made in steps 16 and 17 above to the outside of the case. Tie case 2 to the driver's seat back with a length of 1/2-inch tubular nylon webbing.

(19) Run a length of 1/2-inch tubular nylon webbing though both of the loops made in steps 16 and 17 above. Draw the loops taut and tie the webbing using a trucker's hitch.

Figure 5-12. GLPS Rigged in M1056 Truck (continued)

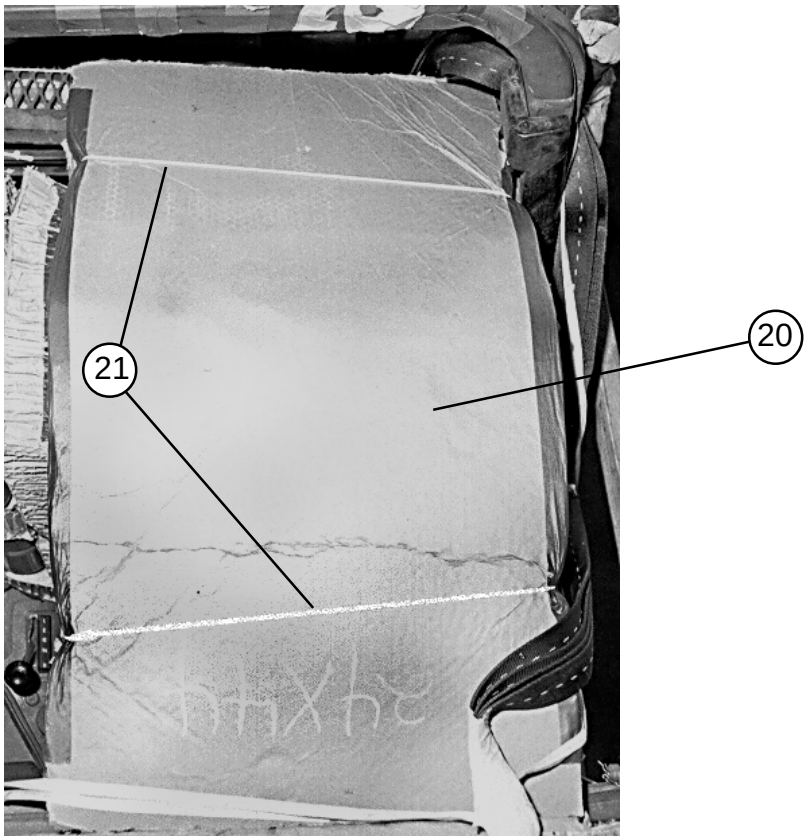

(20) Bend a 44- by 24-inch piece of honeycomb over the steering wheel and case 2. Tape the outside edges of the honeycomb.

(21) Tie the honeycomb to convenient points in the truck with type III nylon cord.

Figure 5-12. GLPS Rigged in M1056 Truck (continued)

RIGGING MECHANIC SHOP KIT IN M998 TRUCK

5-13. Use the procedures shown in Figure 5-13 to rig the Mechanic Shop Kit in a cargo/troop carrier-configured truck. The load shown weighs 980 pounds.

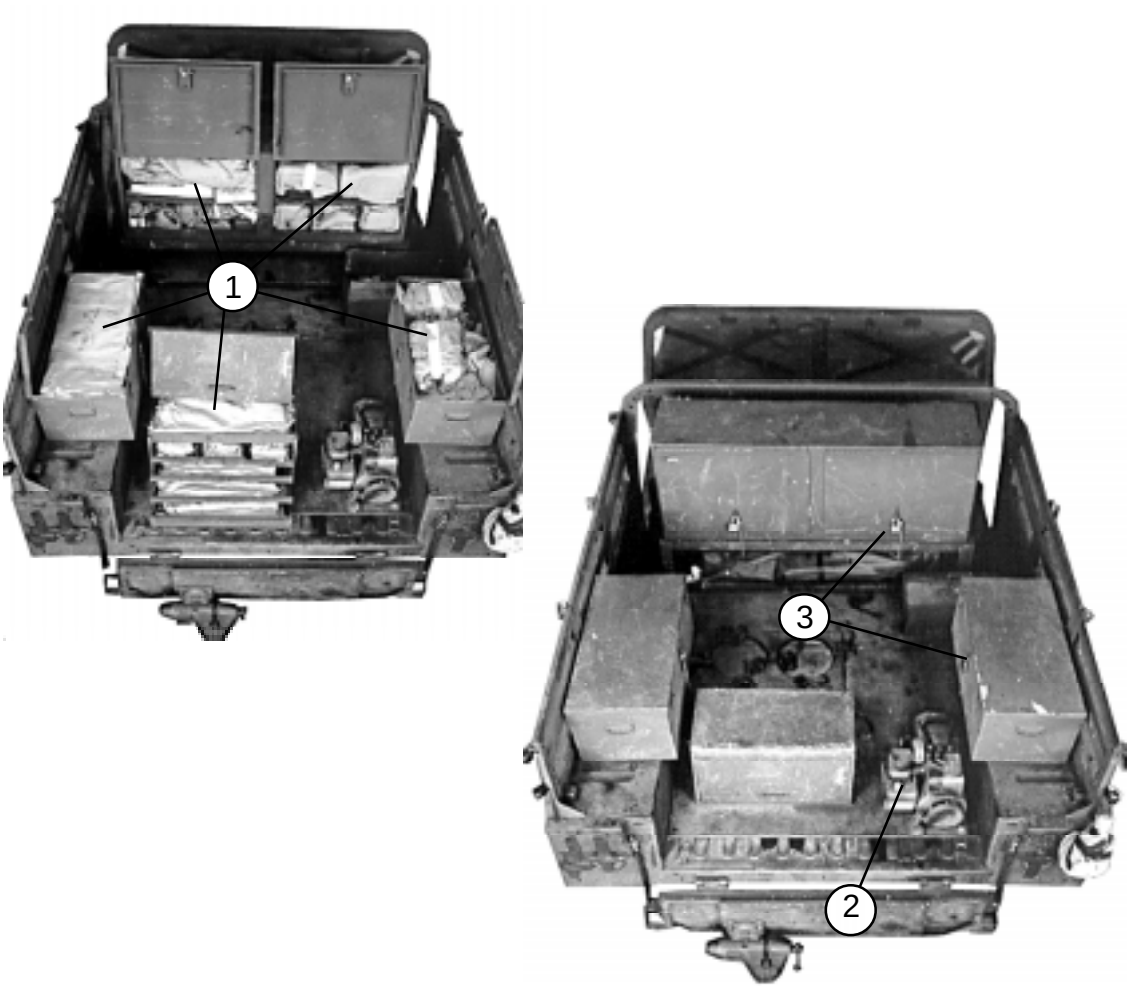

1. Pad loose tools, parts, and small items of equipment, and stow them in the permanently mounted toolboxes.
2. Drain all fuel from the generator. Be sure the generator is mounted securely to the load bed.
3. Close and lock all drawers and doors.

Figure 5-13. Mechanic Shop Kit Rigged in M998 Truck

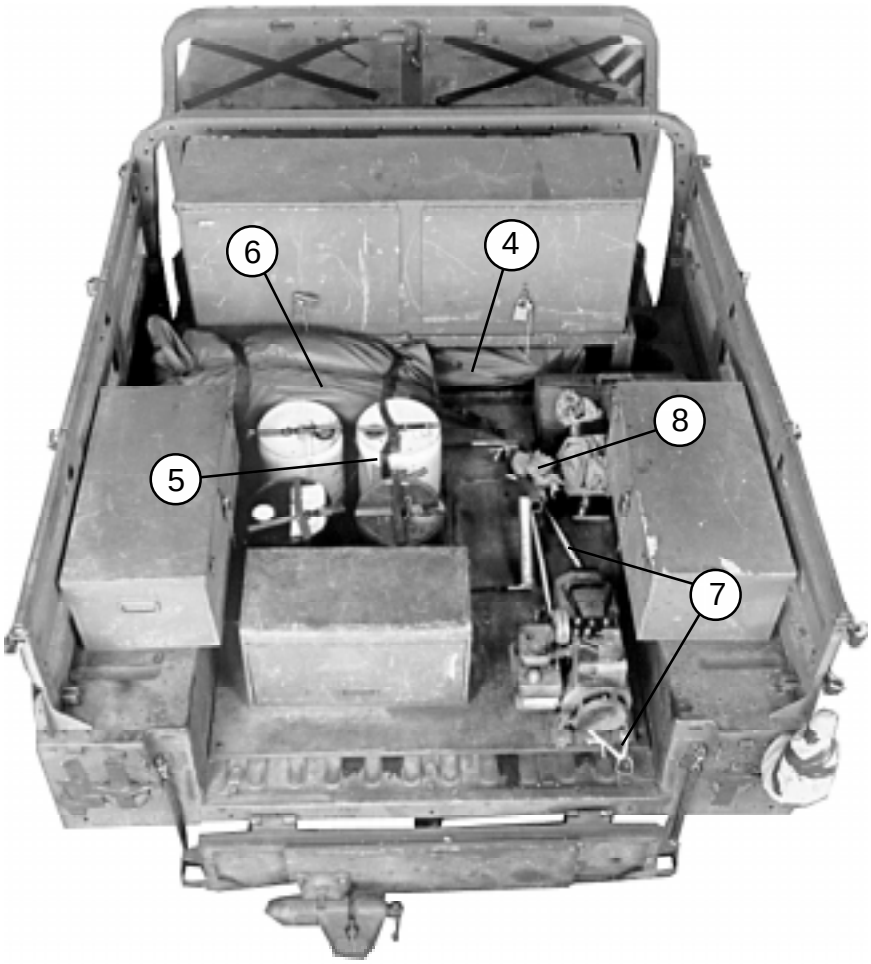

(4) Lay the sledgehammer and pry bars under the front cabinet. Cover them with the truck tarp and the camouflage net pole bag. Secure them with the straps provided.

(5) Place the four oilcans in the bed cutouts, and secure them with the straps provided.

(6) Place the camouflage net bag between the front cabinet and the oilcans. Secure the bag with the straps provided.

(7) Tie the generator frame to the closest tie-down rings with 1/2-inch tubular nylon webbing.

(8) Tie the engine lifting sling to the front tie-down ring with type III nylon cord. Pad the sling with cellulose wadding where it touches the toolboxes.

Note: If acetylene tanks are included, secure them to the right of the cabinet with the tie-down straps provided.

Figure 5-13. Mechanic Shop Kit Rigged in M998 Truck (continued)

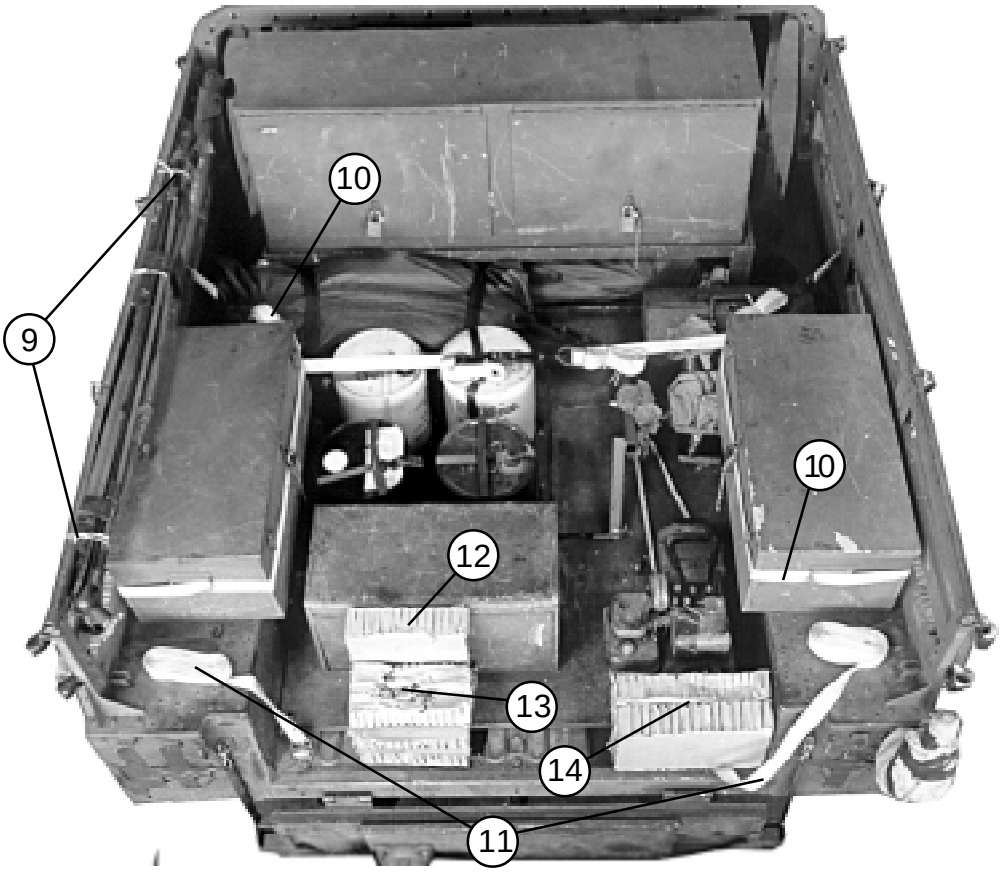

(9) Tape the antenna sections together. Tie them to the left side rail in three places with type III nylon cord.

(10) Pass a 15-foot lashing around each side toolbox and around the second and third vertical side rail supports. Secure each lashing with a D-ring and a load binder.

Note: The lashing shown running across the cargo body over the oilcans is used to secure the body side boards.

(11) Pass a 15-foot lashing through each rear tie-down ring and through its own D-ring.

(12) Set a 10- by 12-inch piece of honeycomb on edge against the rear toolbox with a 12-inch side down.

(13) Center a 12- by 5-inch piece of honeycomb on top of two 12- by 10-inch pieces. Set the stack against the honeycomb placed in step 12 above.

(14) Set two 14- by 11-inch pieces of honeycomb on edge against the generator with the 14-inch sides down.

Figure 5-13. Mechanic Shop Kit Rigged in M998 Truck (continued)

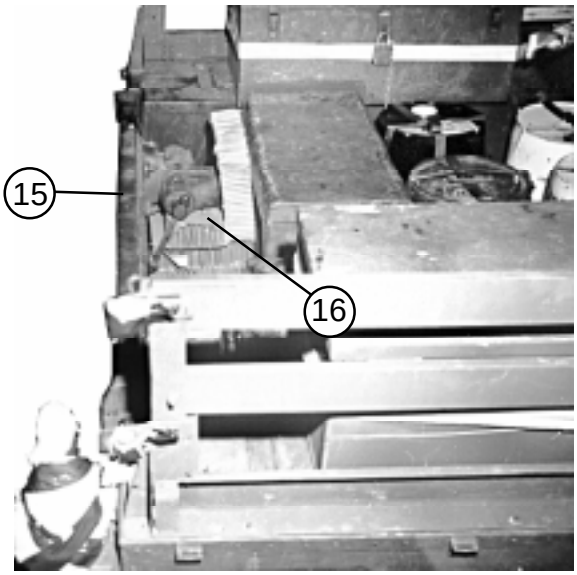

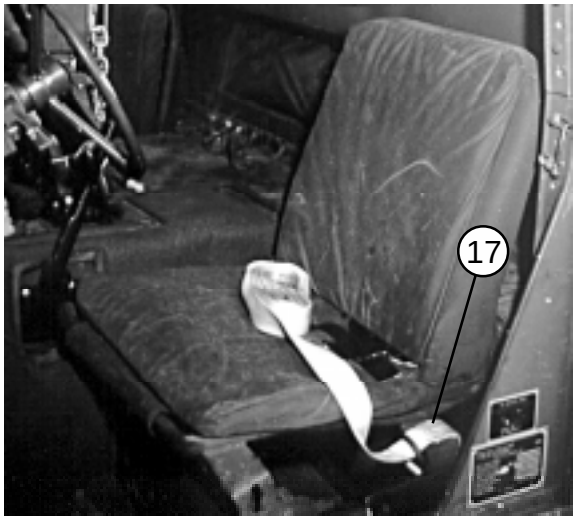

(15) Close the tailgate.

(16) Allow the vise to crush the honeycomb placed in steps 12 and 13. Be sure the honeycomb fully supports the vise.

(17) Run a 15-foot lashing around the driver's seat support and through its own D-ring.

(18) Run a 15-foot lashing through the opening behind the front passenger seat and up though the hole behind the B-pillar. Pass the lashing through its own D-ring.

Figure 5-13. Mechanic Shop Kit Rigged in M998 Truck (continued)

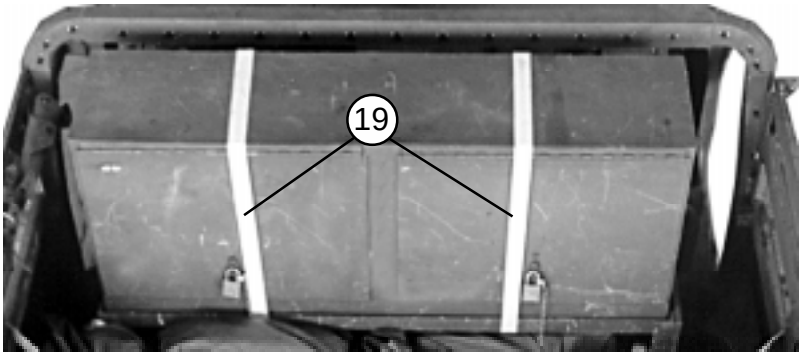

(19) Pass a 15-foot lashing through each tie-down ring behind the seats. Bring each lashing over the top of the tool cabinet, over the doors, and under the cabinet. Fasten each lashing with a D-ring and a load binder behind the cabinet.

Figure 5-13. Mechanic Shop Kit Rigged in M998 Truck (continued)

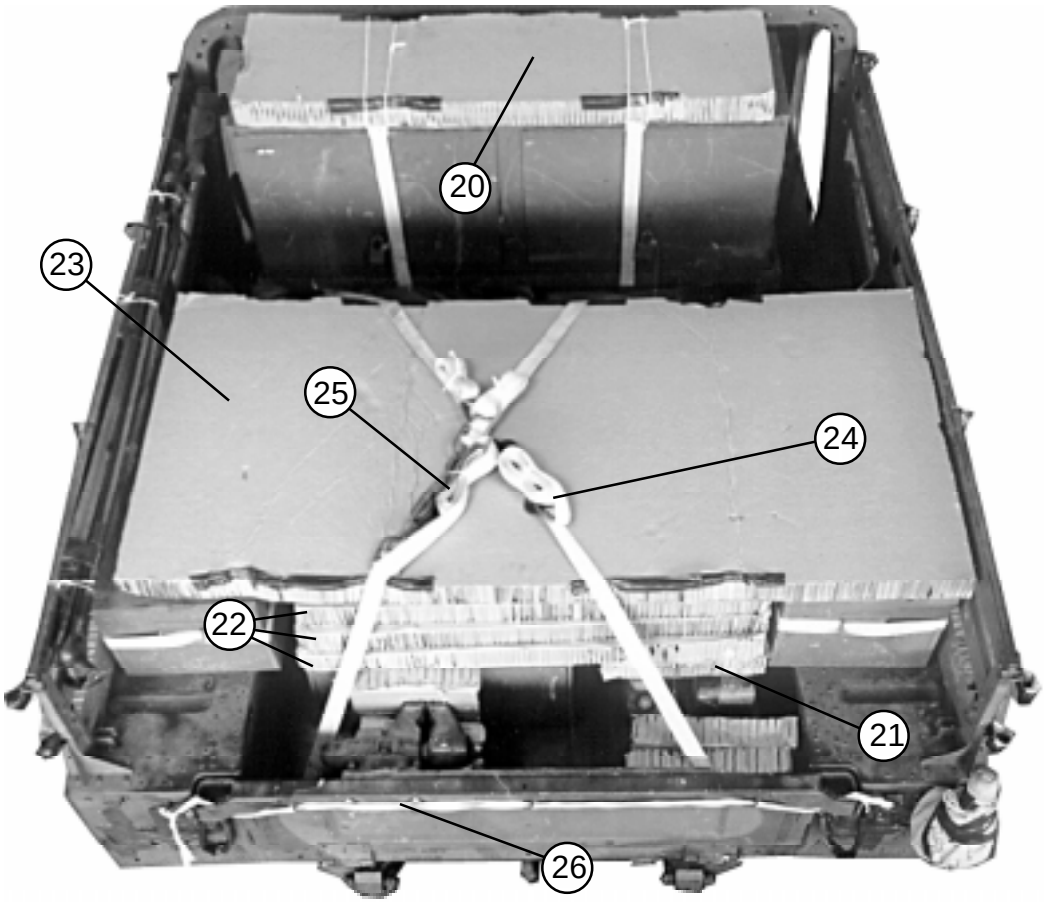

(20) Place a 60- by 15 1/2-inch piece of honeycomb over the top of the tool cabinet. Tape the front and rear edges of the honeycomb. Tie the honeycomb to the lashing below it with type III nylon cord.

(21) Place a 16- by 22-inch piece of honeycomb over the generator.

(22) Place three 46 1/2- by 36-inch pieces of honeycomb between the two side toolboxes.

(23) Place a 75 1/2- by 36-inch piece of honeycomb over the toolboxes and the honeycomb placed in step 22 above. Tape the front and rear edges of the honeycomb.

(24) Secure the lashing placed in step 17 and the right rear lashing together with two D-rings and a load binder.

(25) Secure the lashing placed in step 18 and the left rear lashing together with two D-rings and a load binder.

(26) Secure the tailgate closed with 1/2-inch tubular nylon webbing.

Figure 5-13. Mechanic Shop Kit Rigged in M998 Truck (continued)

RIGGING DENTAL OPERATIVE FIELD SET IN M998 TRUCK

5-14. Use the procedures shown in Figure 5-14 to rig the dental operative field set in a cargo/troop carrier-configured truck. The dental operative field set consists of an X-ray unit, ultrasonic scaler, air compressor, light set, dental equipment cart, and dental chair. Each component fits into its own case. The load shown weighs 834 pounds.

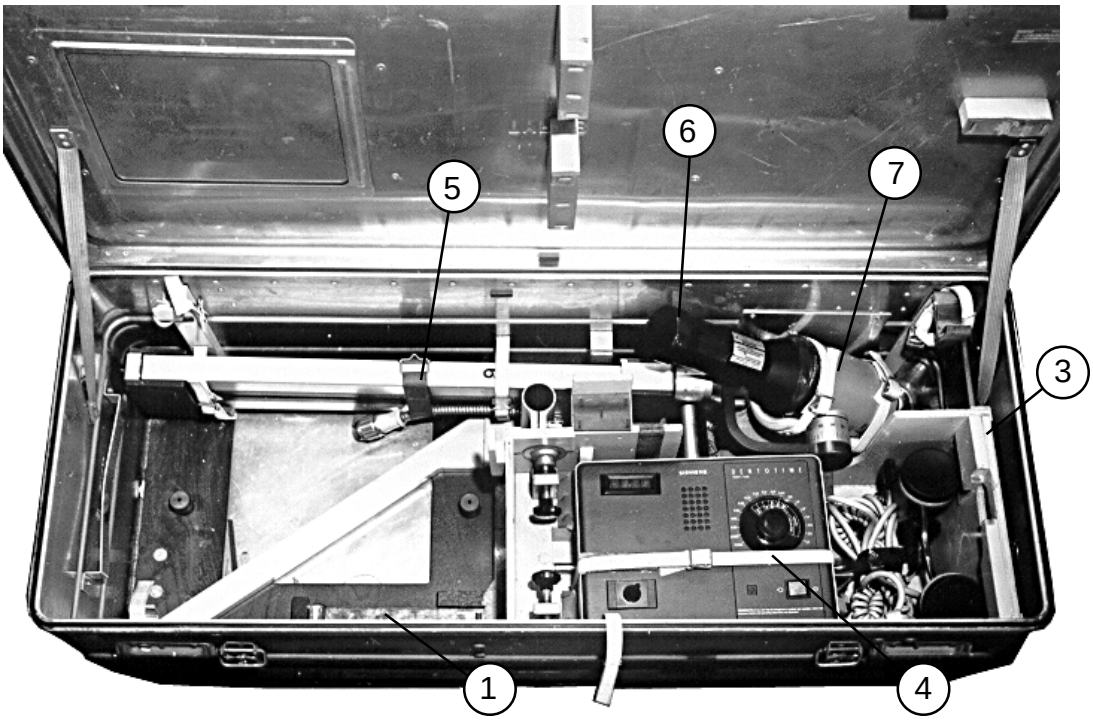

1. Place the seat support rod in its bracket.
2. Cover the right half of the bottom of the box with cellulose wadding (not shown).
3. Place the wooden insert in the right side of the box. Secure the headrest and foot support in the insert with the fitting provided. Tighten the fitting with light pressure only.
4. Secure the timer unit with the strap provided.
5. Secure the scissor arm of the X-ray unit with the strap provided.
6. Tape the cap on the end of the X-ray unit.
7. Place the X-ray unit in the box as shown, and secure it with the straps provided.

Figure 5-14. Dental Operative Field Set Rigged in M998 Truck

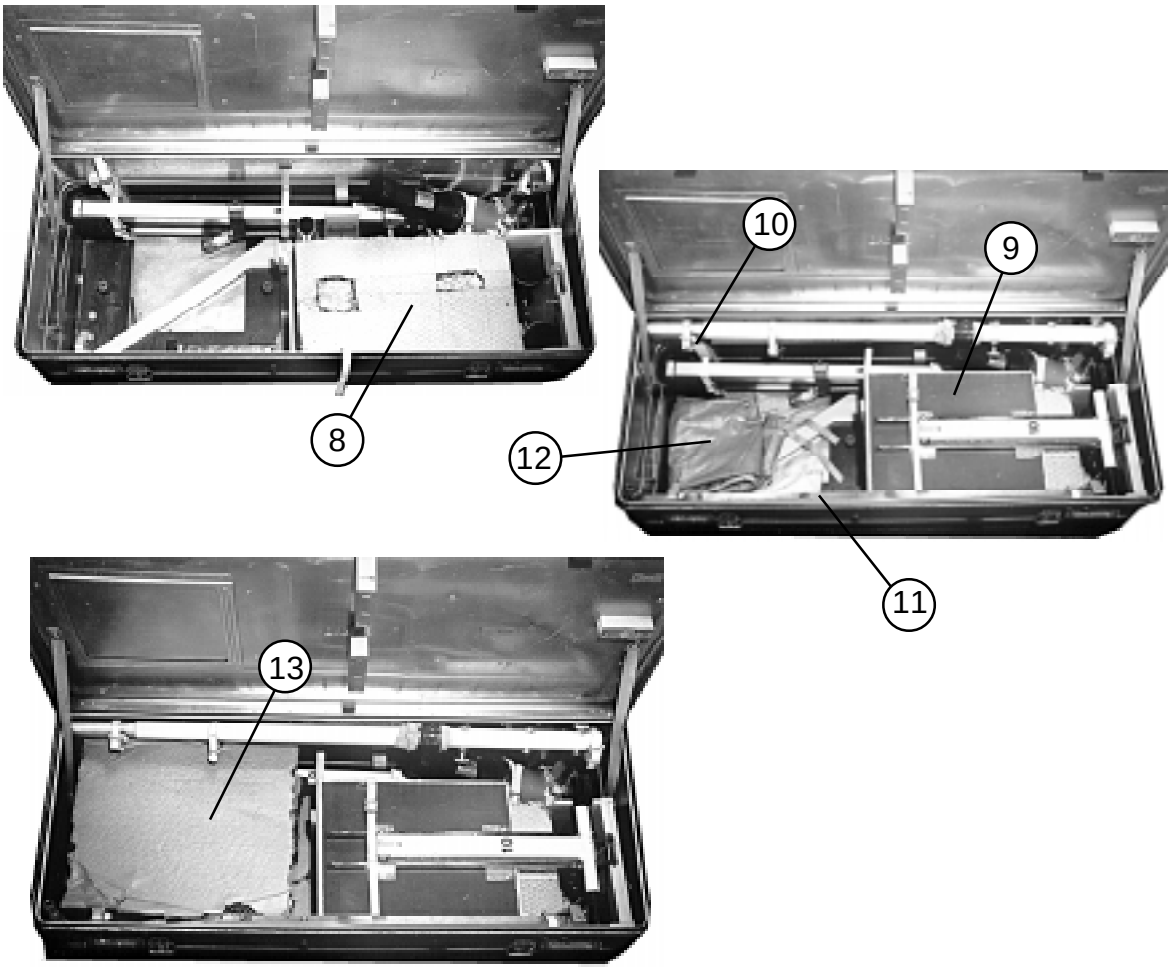

8 Place an 11- by 18 1/2-inch piece of honeycomb over the timer unit. Crush the honeycomb to make it lie flat.

9 Fold the seat and place it over the honeycomb placed in step 8 above. Cut the honeycomb to allow for the knobs on the seat.

10 Secure the mounting rod in its bracket with the straps provided. Pad the rod with cellulose wadding where it touches the X-ray unit. Tape the cellulose wadding in place.

11 Secure the smaller mounting rod in the front of the box with the straps provided.

12 Place the protective aprons in the bottom of the box.

13 Fill the empty space in the box with honeycomb. Close and latch the box.

Figure 5-14. Dental Operative Field Set Rigged in M998 Truck (continued)

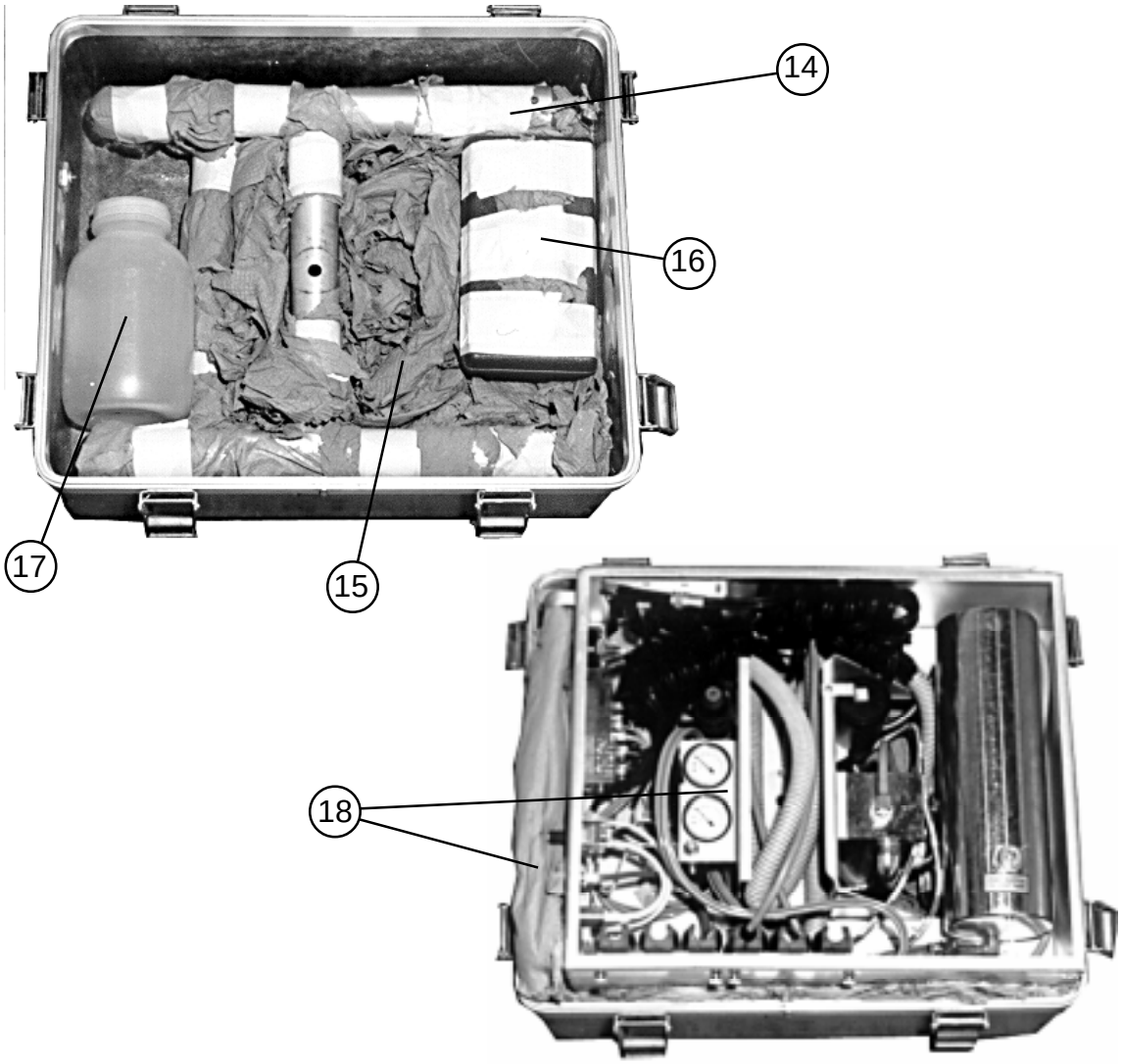

(14) Pad the frame base and post assembly with cellulose wadding taped in place. Place them in the bottom of the box.

(15) Pad the bottom of the box with cellulose wadding.

(16) Tape the toolbox and place it on the right side.

(17) Place the waste container on the left side.

(18) Place the control unit wires and hoses inside the control unit. Place the control unit in the box. Pad the control panel with cellulose wadding.

Figure 5-14. Dental Operative Field Set Rigged in M998 Truck (continued)

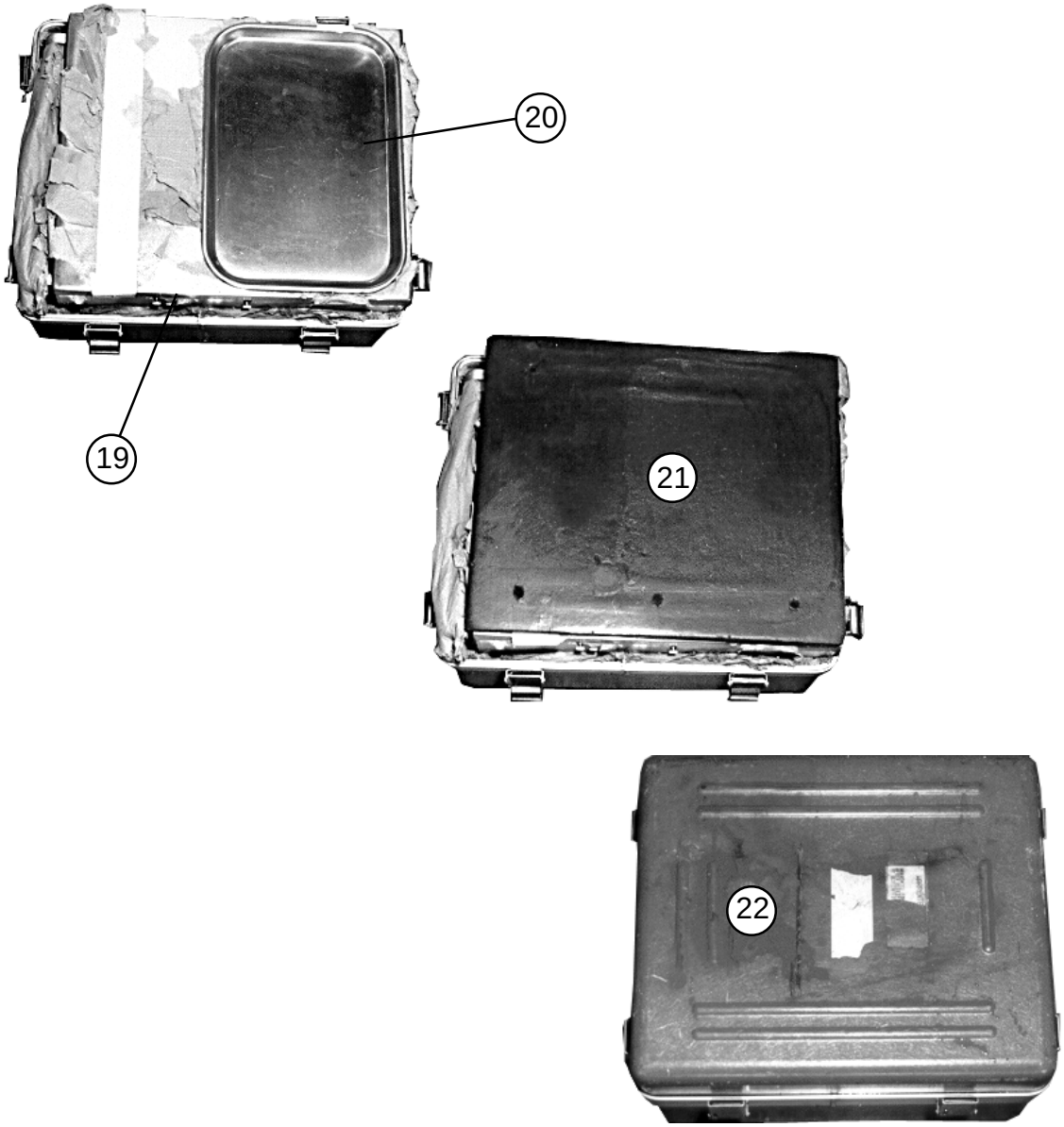

(19) Place the top on the control unit. Pad the top with cellulose wadding.

(20) Place the tray on the right side of the control unit top.

(21) Place the foam pad over the tray and control unit.

(22) Close and latch the box.

Figure 5-14. Dental Operative Field Set Rigged in M998 Truck (continued)

23 Drain the air compressor and fold its cord and hose.

24 Close and latch the box.

25 Pad the light lens with cellulose wadding.

26 Close and latch the box (not shown).

Figure 5-14. Dental Operative Field Set Rigged in M998 Truck (continued)

(27) Wrap the chair foot lever with cellulose wadding. Tie it to the chair base with type III nylon cord.

(28) Fold the chair and stool. Secure them together with type III nylon cord.

(29) Close and latch the box.

(30) Be sure the scaler unit is surrounded by the foam padding provided. Close and latch the box.

Figure 5-14. Dental Operative Field Set Rigged in M998 Truck (continued)

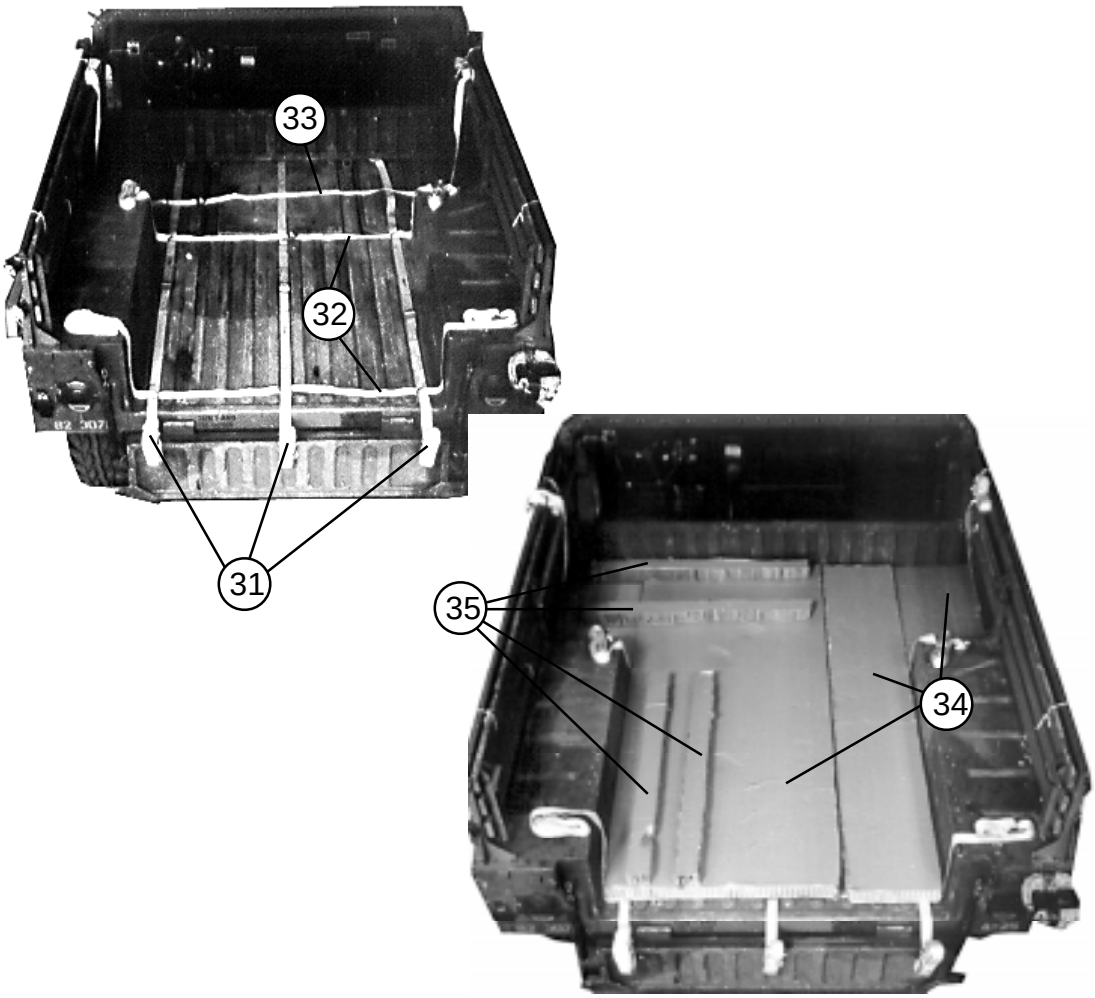

(31) Form six 30-foot lashings according to FM 4-20.102/TO 13C7-1-5. Run three lashings front to rear through the center, left, and right tie-down rings in the cargo bed.

(32) Run two 30-foot lashings side to side through the rear and center tie-down rings.

(33) Lay a 30-foot lashing side to side 12 inches from the front wall of the cargo bed.

(34) Place one 36- by 80-inch piece, one 14 1/2- by 80-inch piece, and two 15- by 30-inch pieces of honeycomb side by side to form one layer covering the cargo bed.

(35) Place four 3- by 44-inch pieces of honeycomb as shown.

Figure 5-14. Dental Operative Field Set Rigged in M998 Truck (continued)

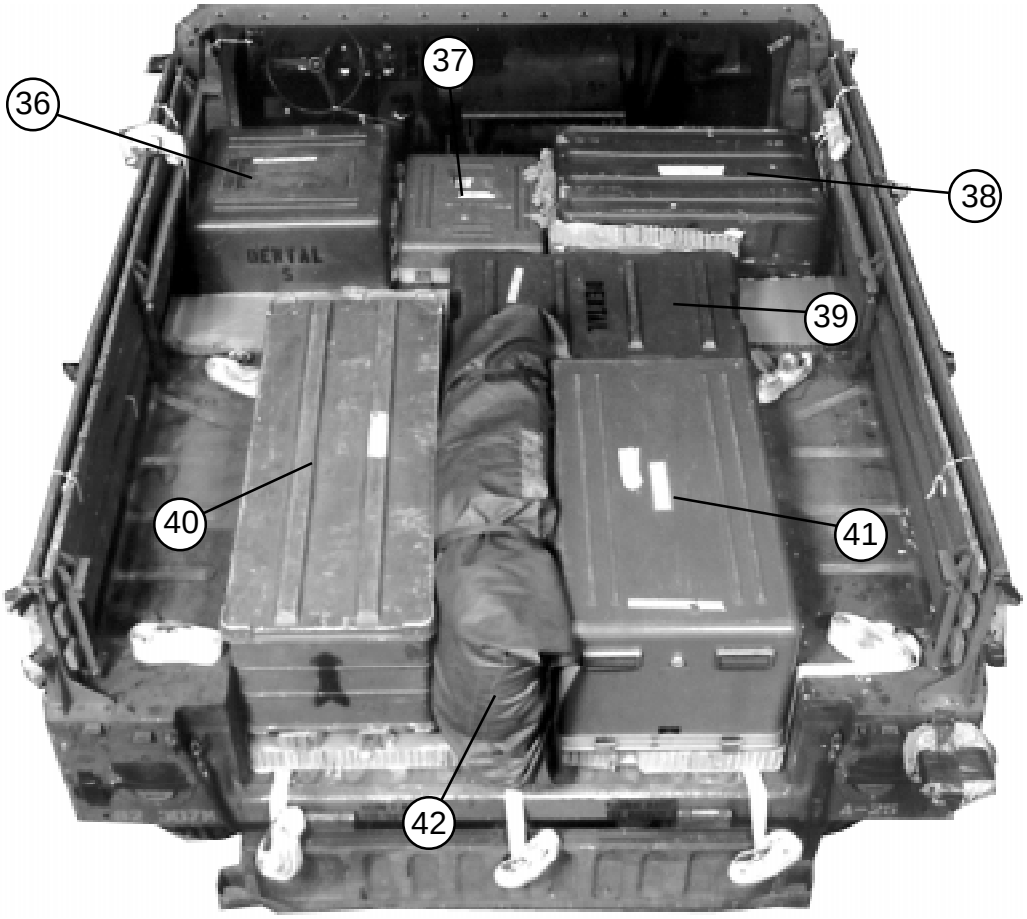

36 Place the compressor box on the honeycomb strips in the left front corner.

37 Set the dental equipment cart box next to the compressor. Place cellulose wadding between the boxes.

38 Place the scaler box next to the cart box. Place cellulose wadding between the boxes.

39 Place the light set box next to the right wall and the scaler box. Place honeycomb as filler between the scaler and light set boxes. Place honeycomb as filler between the light set box and the right wall.

40 Place the X-ray unit on the honeycomb strips on the left, flush with the rear edge of the honeycomb. Place honeycomb as filler between the X-ray and compressor boxes.

41 Place the chair box to the right flush with the rear edge of the honeycomb.

42 Place the camouflage net bag between the X-ray unit and the chair box.

Figure 5-14. Dental Operative Field Set Rigged in M998 Truck (continued)

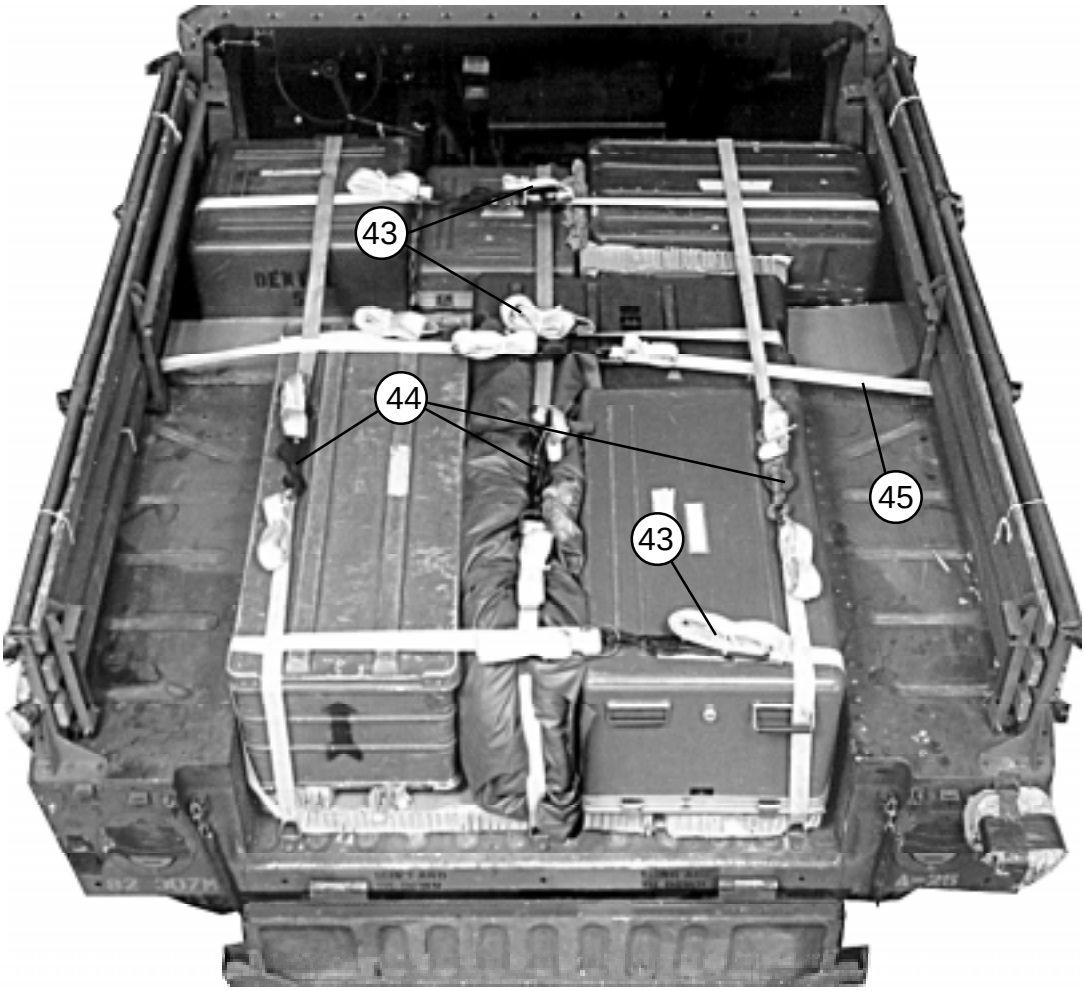

(43) Secure the lashings placed in steps 32 and 33 on top of the load with D-rings and load binders.

(44) Secure the lashings placed in step 31 on top of the load with D-rings and load binders.

(45) Install the body side boards as shown in Figure 2-13. The lashing supporting the body side boards is shown.

Figure 5-14. Dental Operative Field Set Rigged in M998 Truck (continued)

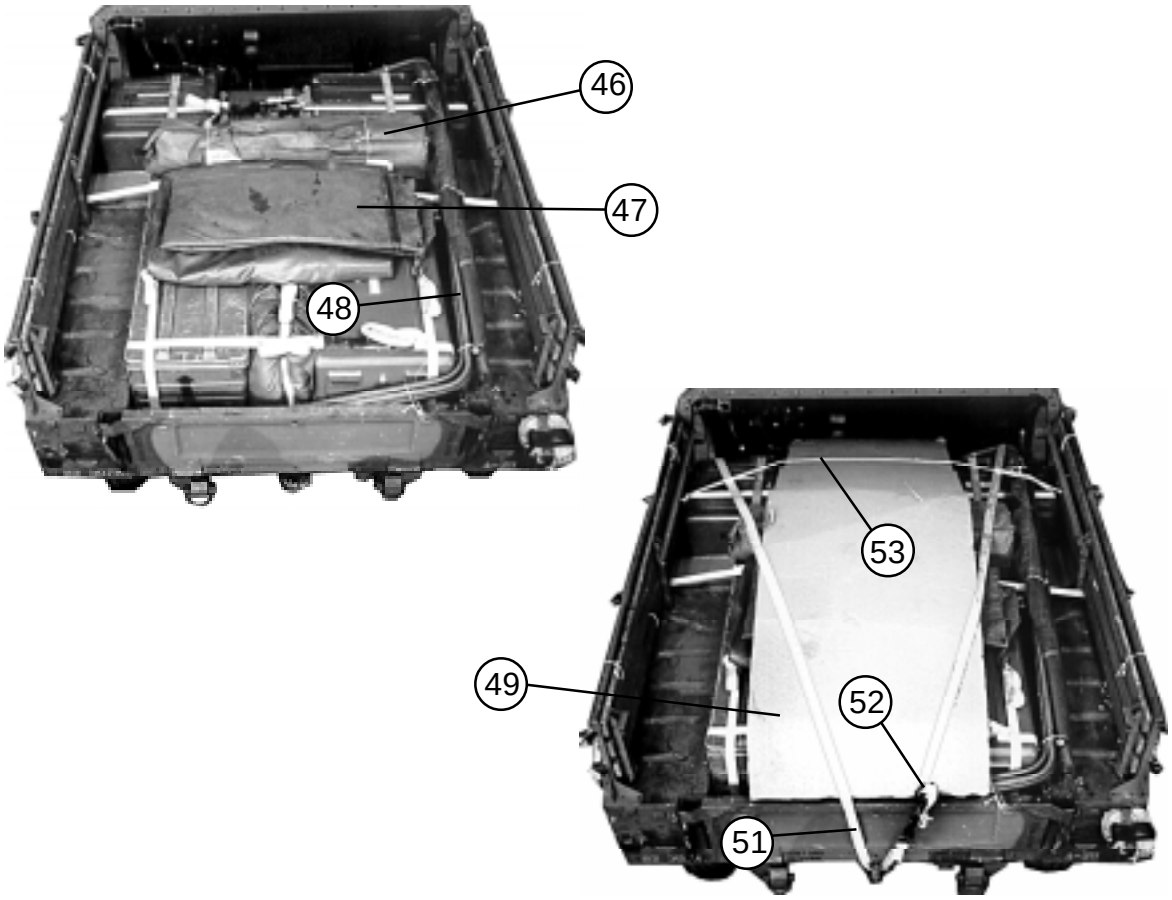

(46) Place the camouflage net pole bag across the boxes as shown. Secure it to convenient points with type III nylon cord.

(47) Fold the truck covers over the truck doors. Place them on top of the load as shown.

(48) Place the bows on the right side as shown. Tie them together and to convenient points with type III nylon cord.

(49) Place a 36- by 96-inch piece of honeycomb over the load.

(50) Position a 15-foot lashing (not shown) behind each front seat as shown in Figure 5-13, steps 17 and 18.

(51) Pass the left lashing up over the load and through the towing pintle.

(52) Pass the right lashing up over the load. Secure it to the left lashing with two D-rings and a load binder.

(53) Tie a length of 1/2-inch tubular nylon webbing over the honeycomb. Secure the webbing to the side rails.

Figure 5-14. Dental Operative Field Set Rigged in M998 Truck (continued)

RIGGING SOFT TOP INSTALLATION KIT IN M998 TRUCK

5-15. Use the procedures shown in Figure 5-15 to rig the soft top installation kit and accompanying equipment in a cargo/troop carrier-configured truck. An additional 300 pounds must be added to the items shown to meet the minimum weight requirement of 800 pounds for the accompanying load. Three boxes of 105-mm ammunition are shown here, but other items weighing the same or more may be used.

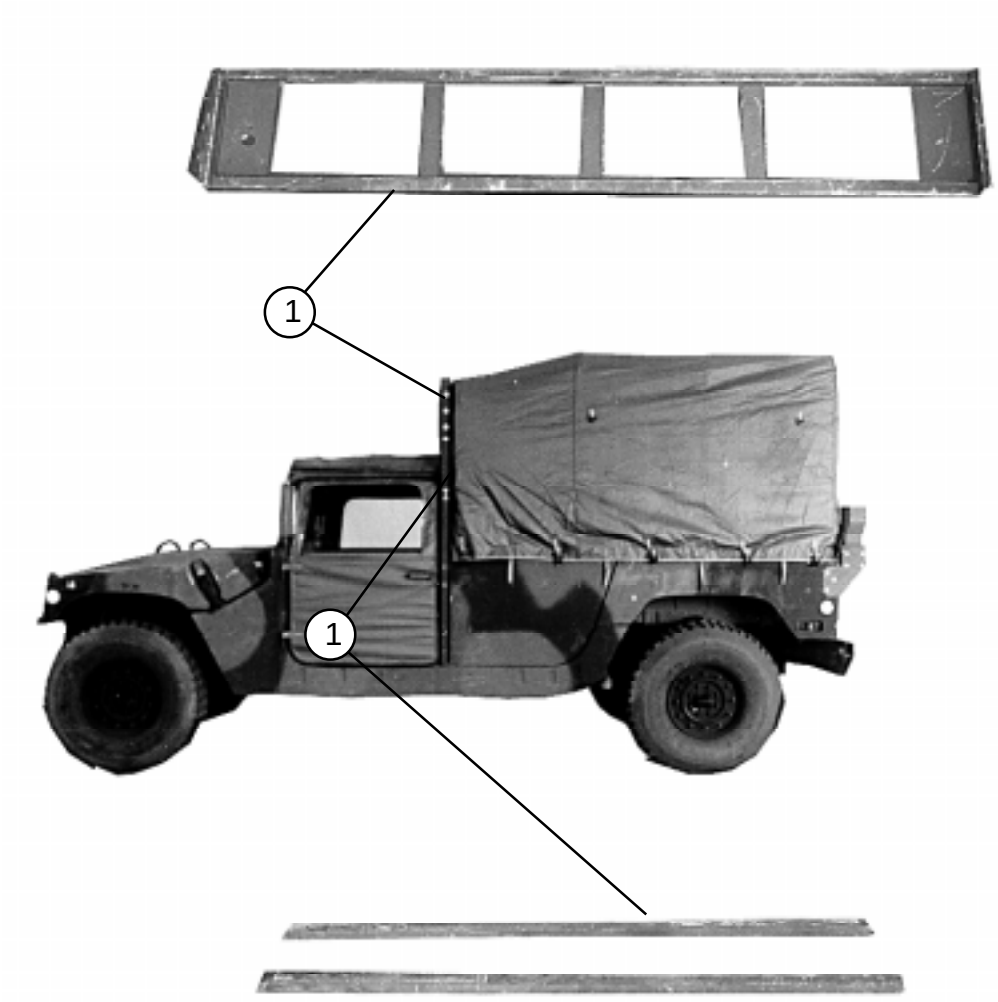

1 Remove the front antenna mount and uprights from the front of the truck cargo bed. Detach the uprights from the antenna mount and replace the bolts in the sides of the truck and in the mount.

Figure 5-15. Soft Top Installation Kit Rigged in M998 Truck

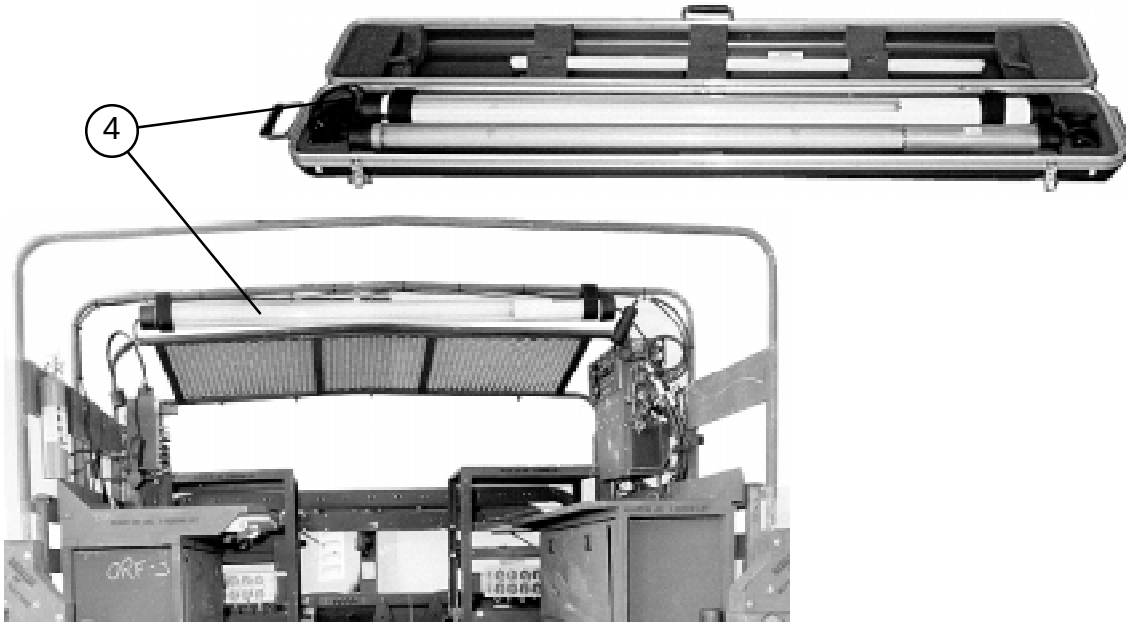

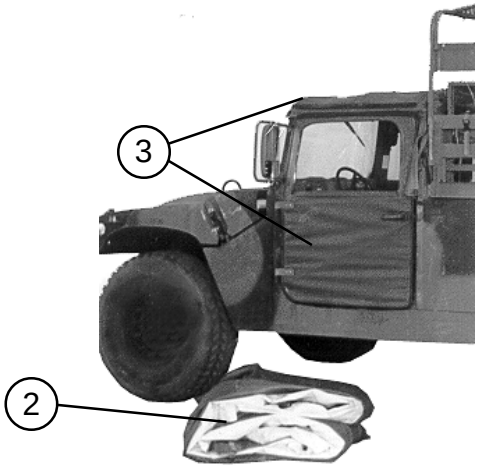

2 Remove the canvas top and white liner. Roll the liner inside the top.

3 Remove the cab cover, doors, and bows.

4 Remove the overhead light and store it in its case. Leave the light cable attached to the light bow, and pad and tape the cable ends.

Figure 5-15. Soft Top Installation Kit Rigged in M998 Truck (continued)

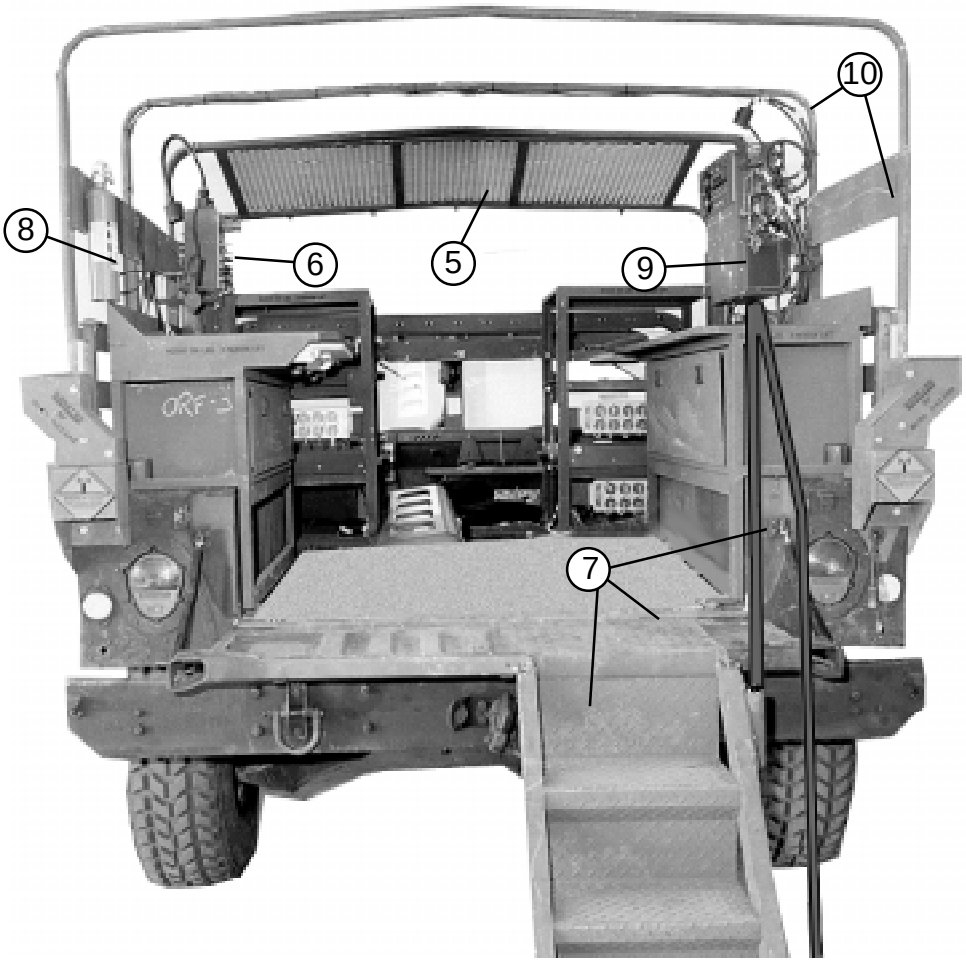

5 Remove the front workstation guard. Replace the screws in the guard.

6 Remove the workstation data module from its bracket, then remove the bracket.

7 Remove the stairs, stair rail, and tailgate gap cover.

8 Remove the fire extinguisher from the left side guard.

9 Remove the power control module from its bracket from the right side guard.

10 Remove the center canvas support bow. Remove the forward support bow. Have an assistant support the side guard on each side as the rear support bow is removed. Detach the side guards from the rear support bow.

Figure 5-15. Soft Top Installation Kit Rigged in M998 Truck (continued)

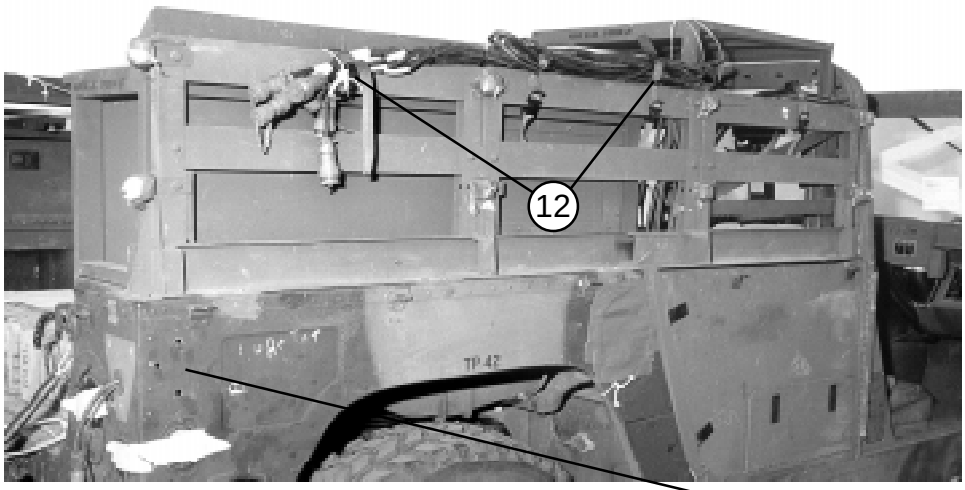

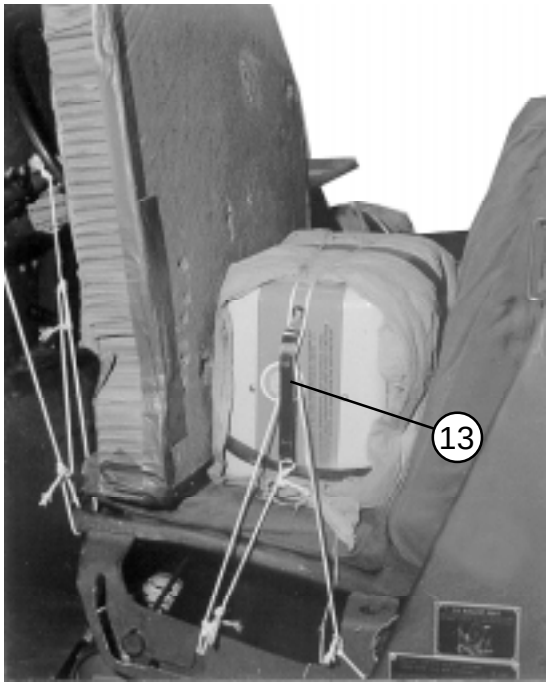

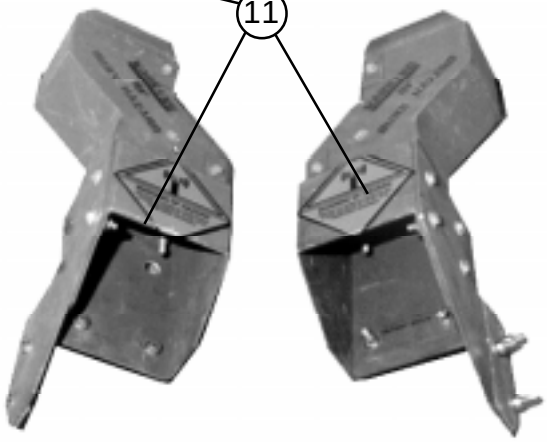

(11) Remove the Z-bracket antenna mounts. Leave the nuts and bolts in the mounts.

(12) Secure the cables to the top of the right side rail with the straps provided.

(13) Remove the heater from its storage box, pad it with cellulose wadding, and tie it to the driver's seat frame with type III nylon cord.

Figure 5-15. Soft Top Installation Kit Rigged in M998 Truck (continued)

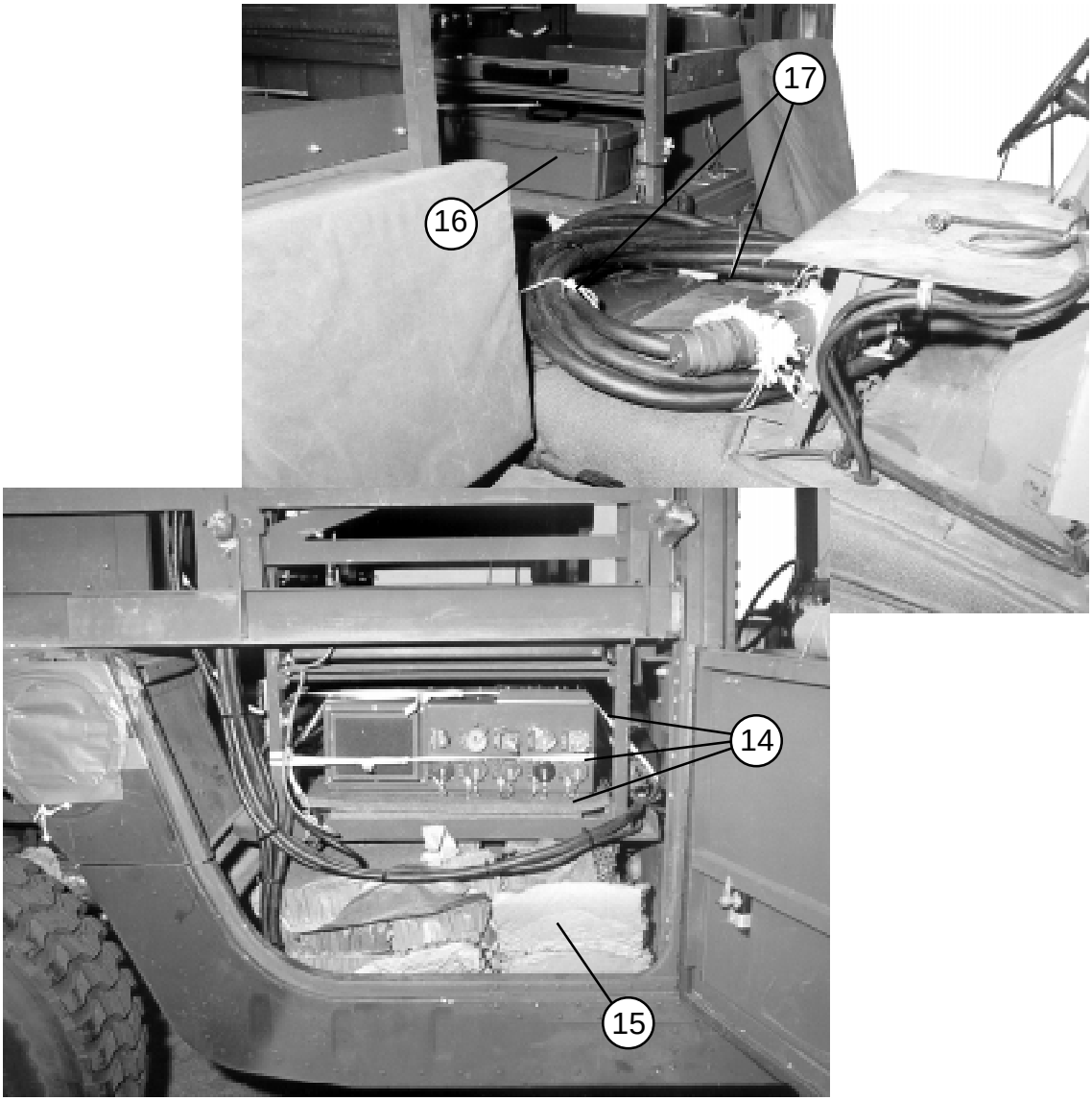

(14) Cover the right side station rack with two pieces of felt cut to fit. Place the power control module on the felt and tie it to the rack with 1/2-inch tubular nylon webbing.

(15) Cover the power cable in the floor with honeycomb cut to fit. Pad the truck mirrors, place them on the honeycomb, and fill the remaining area with honeycomb. Close the door and tape it shut.

(16) Place the toolboxes under the left side station rack and tie them in place with type III nylon cord.

(17) Secure the main power cable between the front seats with type III nylon cord.

Figure 5-15. Soft Top Installation Kit Rigged in M998 Truck (continued)

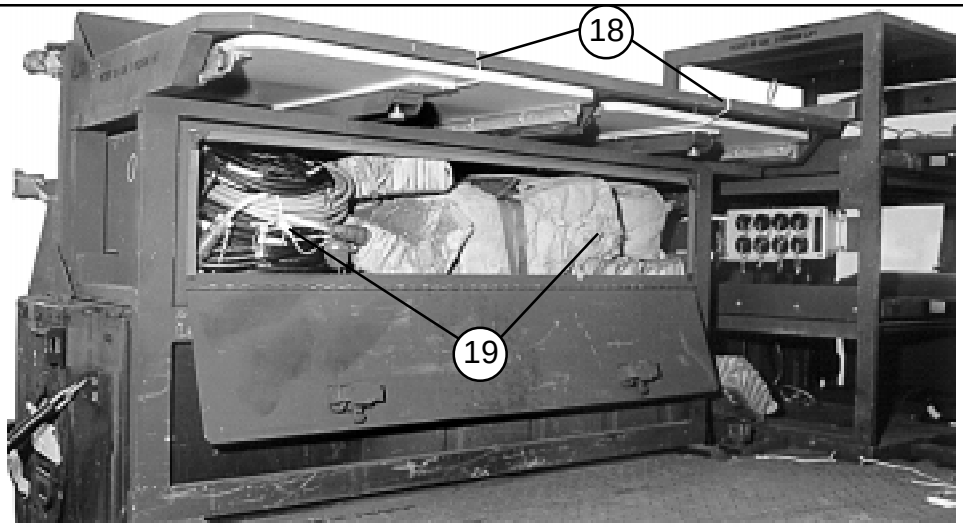

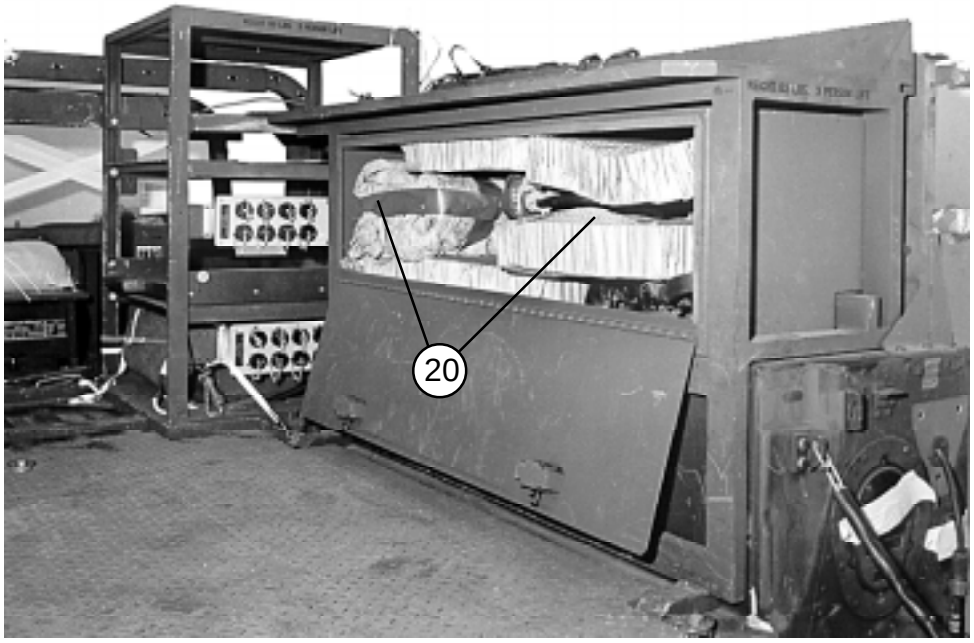

(18) Secure the left side worktables with type III nylon cord.

(19) Pad both antenna brackets with cellulose wadding taped in place. Roll loose cables and place them with the antenna brackets in the left side storage box. Fill empty space with honeycomb.

(20) Pad the communications module, work station data module, their mounting brackets, and the fire extinguisher with cellulose wadding taped in place. Place these items in the right side storage box. Fill empty space with honeycomb.

(21) Close and secure the doors of both storage compartments (not shown).

Figure 5-15. Soft Top Installation Kit Rigged in M998 Truck (continued)

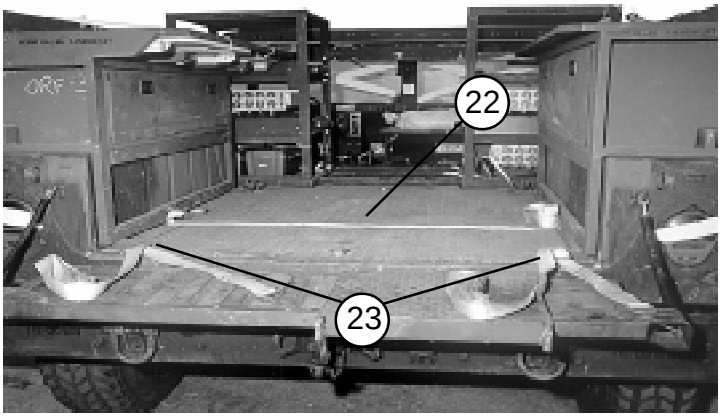

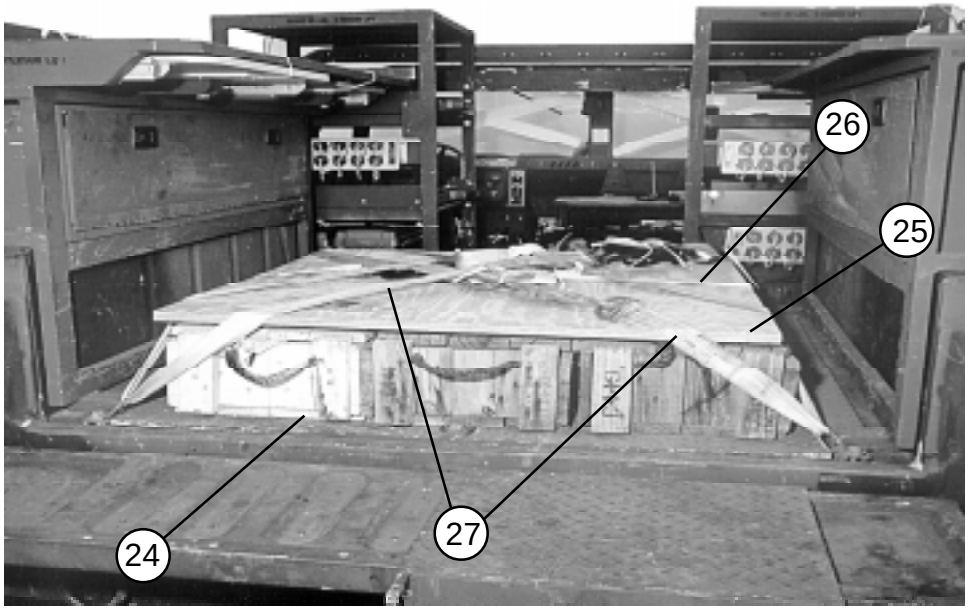

(22) Lay a 15-foot lashing from side to side 18 inches from the rear edge of the truck bed.

(23) Place one 15-foot lashing in the right rear tie-down ring, and another in the left rear tie-down ring.

(24) Place three 105-mm ammunition boxes or a similarly configured load weighing at least 300 pounds over the lashing placed in step 22.

(25) Place a 36- by 36-inch piece of 3/4-inch plywood over the load.

(26) Secure the lashing placed in step 22 over the plywood.

(27) Pass the lashing in the left rear tie-down ring through the right front tie-down ring. Secure the lashing over the load. Pass the lashing in the right rear tie-down ring through the left front tie-down ring. Secure the lashing over the load.

Figure 5-15. Soft Top Installation Kit Rigged in M998 Truck (continued)

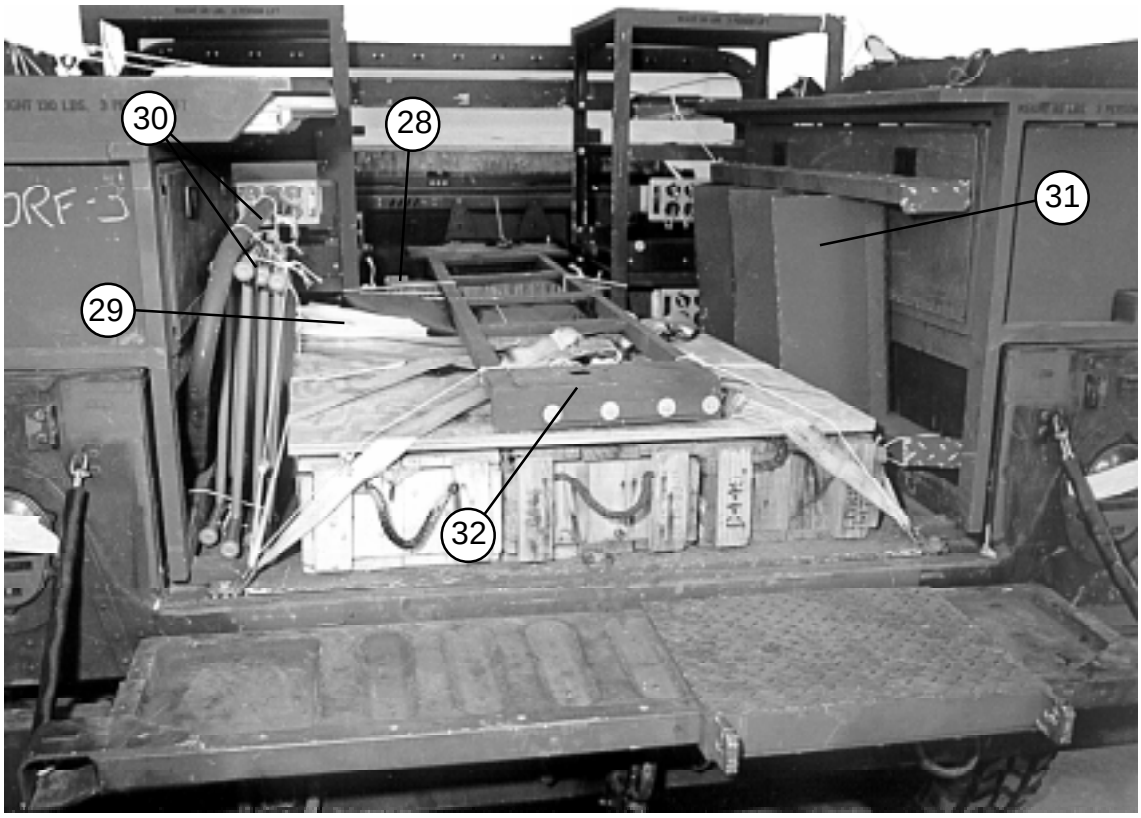

(28) Place three 24- by 24-inch pieces of honeycomb between the left and right work station racks.

(29) Lay the folded cab and cargo body covers and the white liner in front of the ammunition boxes and tie them to convenient points with type III nylon cord.

(30) Place the folding chairs and stair handrail against the left cabinet and tie them to convenient points with type III nylon cord.

(31) Place the stairs against the right cabinet, and tie them to convenient points with type III nylon cord.

(32) Center the front antenna mount cross bracket over the honeycomb placed in step 28 and the ammunition boxes. Secure the bracket to tie-down rings and to the racks with type III nylon cord.

Figure 5-15. Soft Top Installation Kit Rigged in M998 Truck (continued)

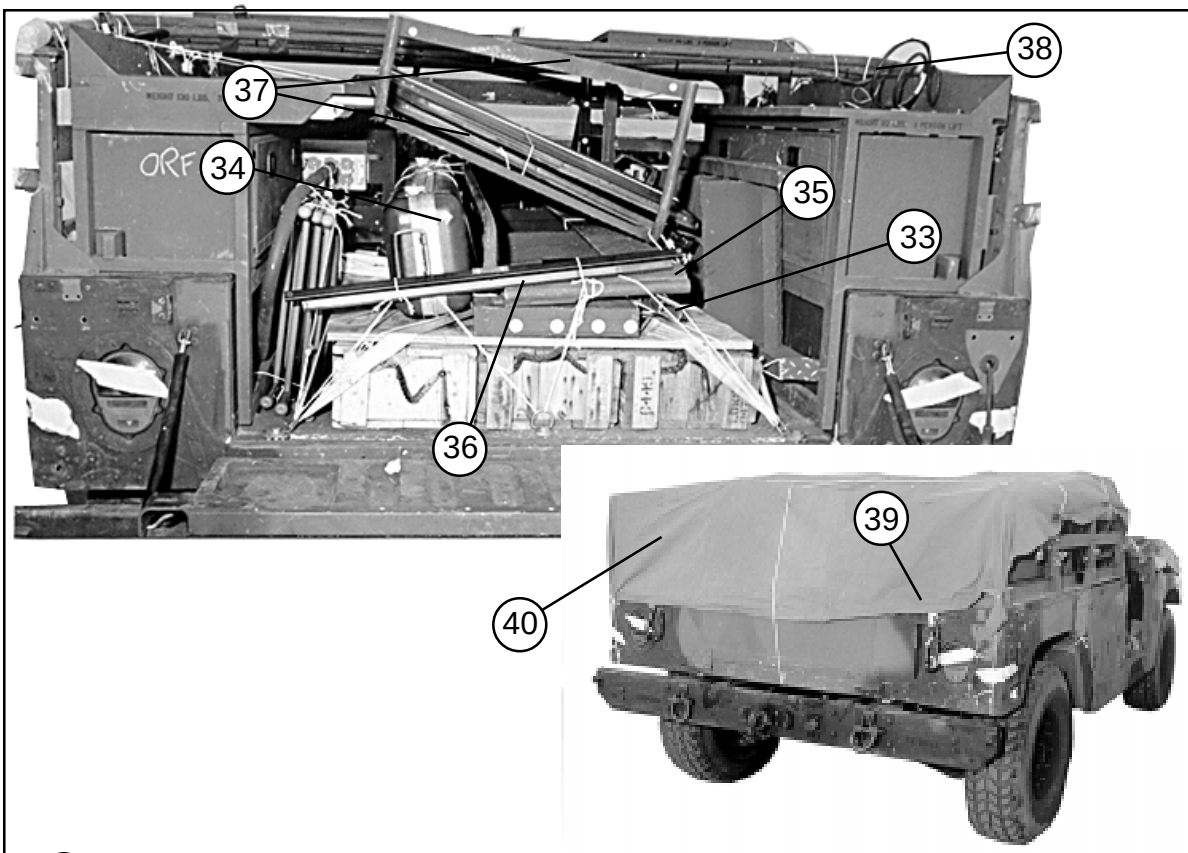

(33) Tie the front antenna mounts and the tailgate gap guard together and to convenient points to the right of the anntenna cross bracket with type III nylon cord.

(34) Place the light set box betwen the left station rack and the antenna cross bracket. Secure the box to the right rear tie-down rings and to other convenient points with type III nylon cord.

(35) Place the side guards over the antenna cross bracket, and tie it to convenient points with type III nylon cord.

(36) Place the cab top bow with the cross piece next to the light box, and tie it to convenient points with type III nylon cord.

(37) Center and invert the front work station guard over the load. Place the cab doors within the work station guard, and tie these items to each other and to convenient points with type III nylon cord.

(38) Place the cargo body canvas bows across the cargo area and secure them to the side rails with type III nylon cord.

(39) Close the tailgate and secure it with 1/2-inch tubular nylon webbing.

(40) Cover the load with cotton duck cloth tied in place with type III nylon cord.

Figure 5-15. Soft Top Installation Kit Rigged in M998 Truck (continued)

RIGGING VIPER GENERATOR SYSTEM IN HMMWV-SERIES TRUCK

5-16. Use the procedures shown in Figure 5-16 to rig the Viper generator system in HMMWV-series trucks. The Viper consists of an under-the-hood engine-driven generator, control switches on the truck's instrument panel, and control boxes located under the rear seat. The generator and instrument panel switches require no preparation. Prepare the control boxes as shown in Figure 5-16.

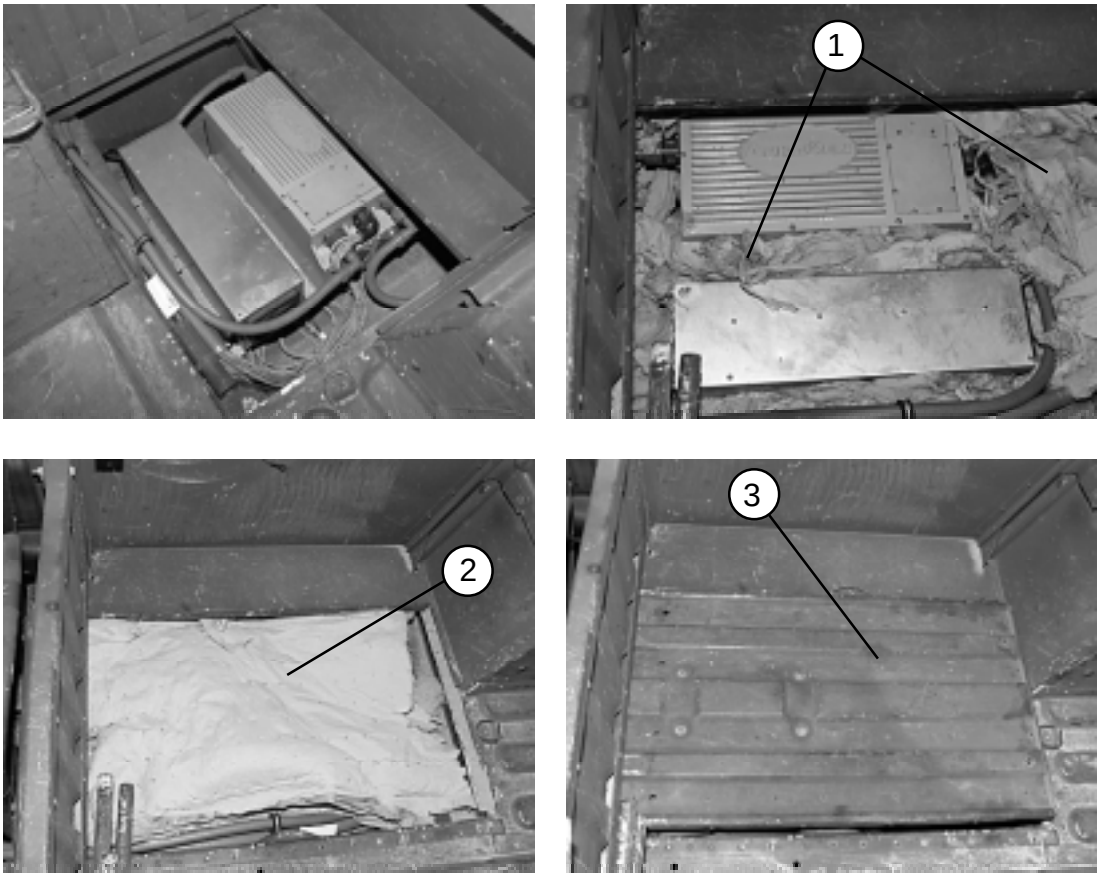

1. Pad the spaces around the control boxes with cellulose wadding.
2. Place full sheets of cellulose wadding over the control boxes to fill the space.
3. Fold the rear seat over the control boxes and latch them in place.

Figure 5-16. Viper Generator System Control Boxes Prepared

RIGGING DRIVER VISION ENHANCER IN HMMWV-SERIES TRUCK

5-17. Use the procedures shown in Figure 5-17 to rig the driver vision enhancer (DVE) in HMMWV-series trucks. The optical components fit into their own padded case. The rest of the system fits into a rack mounted behind the driver's seat.

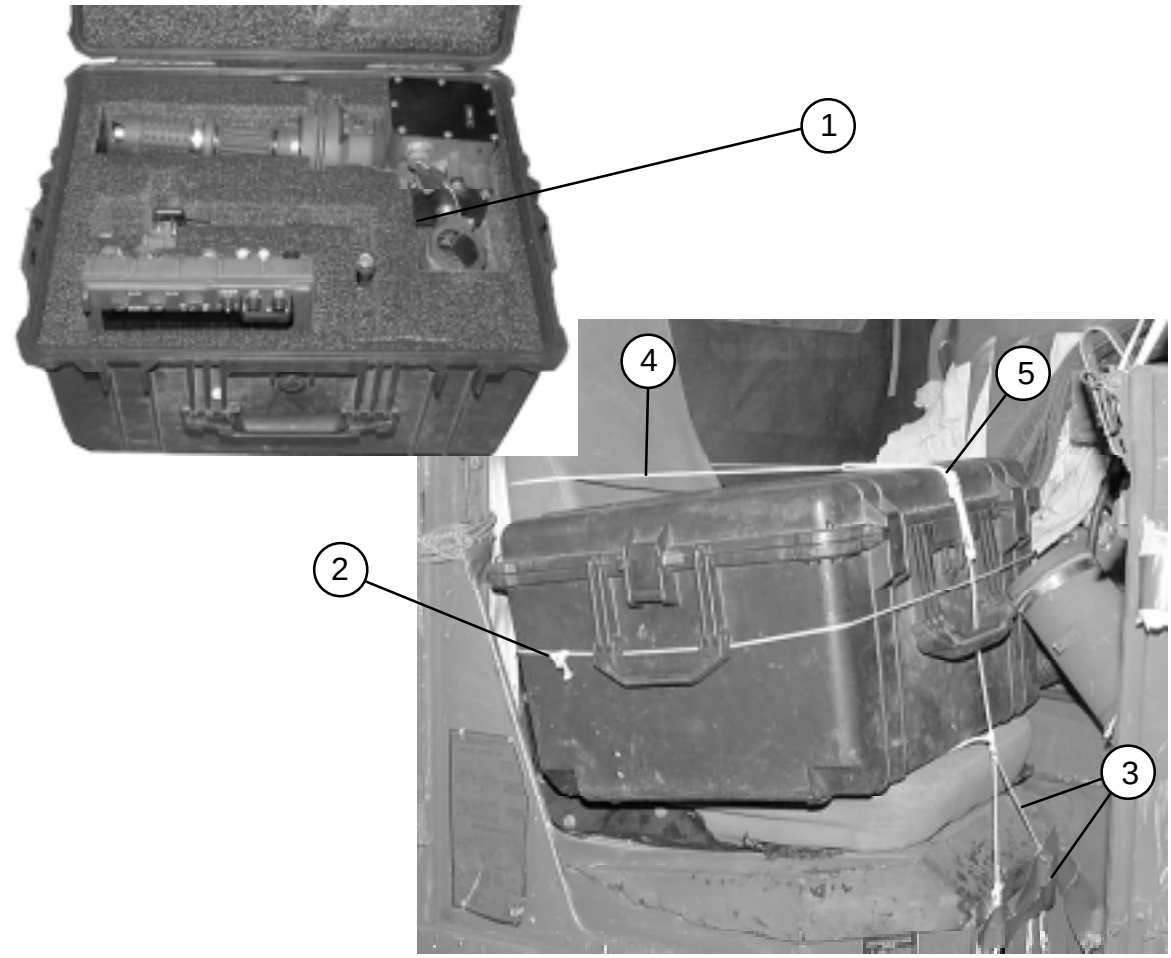

1. Remove the DVE from its rack. Stow the removable components in their padded case.
2. Tie the box to the seat back with a length of type III nylon cord.
3. Form a loop in an 18-inch length of type III nylon cord. Pass it under both seat latches and tape the latches.
4. Form a loop in a 30-inch length of type III nylon cord. Pass the cord around the seat back.
5. Tie the loops made in steps 3 and 4 to each other with type III nylon cord.

Figure 5-17. DVE Rigged in Cargo/Troop Carrier

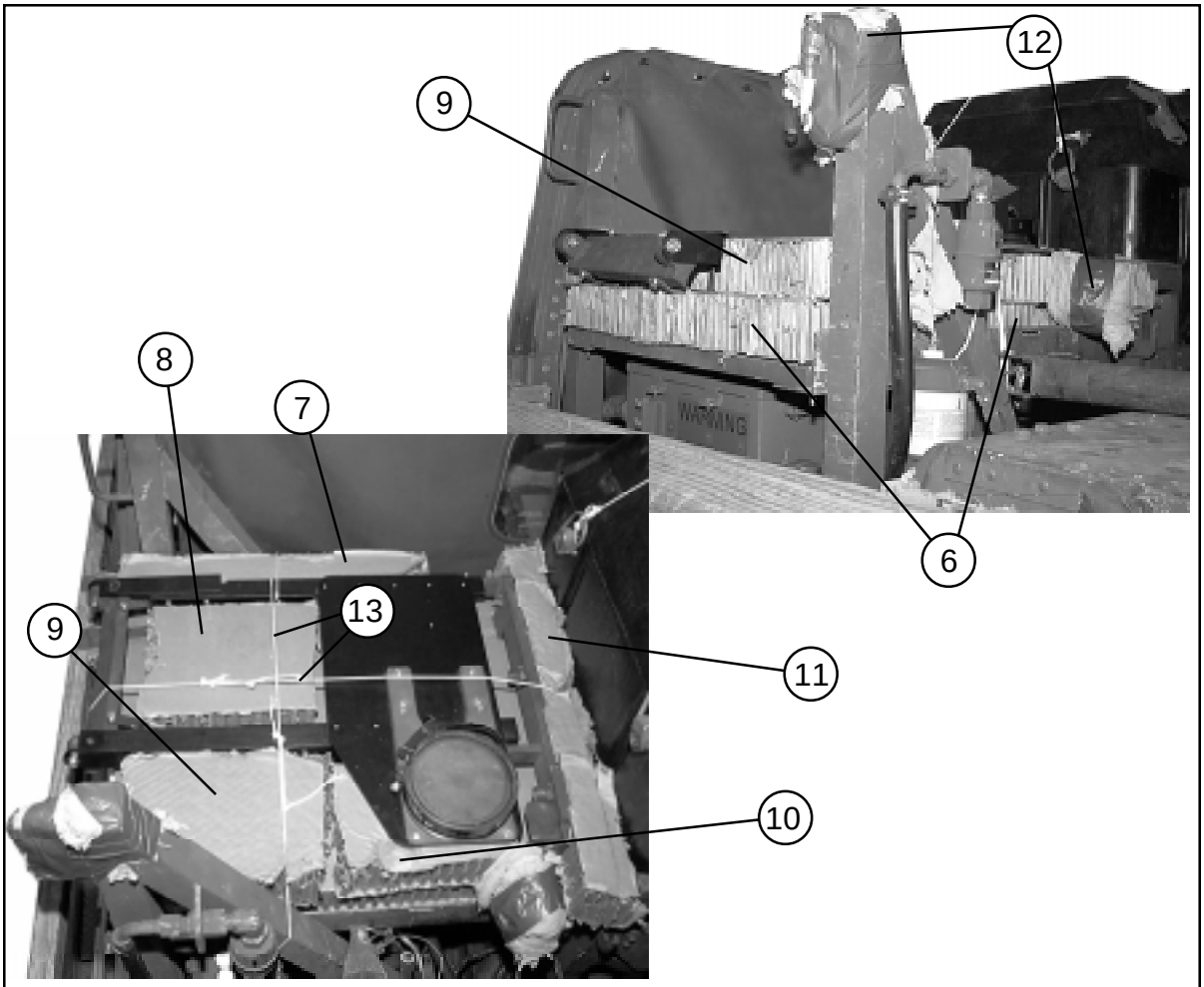

6 Fit a 24- by 27-inch piece of honeycomb on the hopper step, behind the driver's seat, and against the left side of the hopper.

7 Fit a 21- by 3-inch piece of honeycomb over the base piece in the front.

8 Fit a 11-by 9-inch piece of honeycomb in the space beside the honeycomb placed in step 7.

9 Fit an 11- by 8-inch piece of honeycomb to the rear of the piece placed in step 8.

10 Fit a 10- by 7-inch piece of honeycomb under the round portion of the plate.

11 Fit a 3- by 26-inch piece of honeycomb on the right side.

12 Pad the top of the rack and the fixture on the right side with cellulose wadding taped in place.

13 Tie the honeycomb placed in steps 6 through 12 above with type III nylon cord. Route the cord under the hopper step and over the rack.

Figure 5-17. DVE Rigged in Cargo/Troop Carrier (continued)

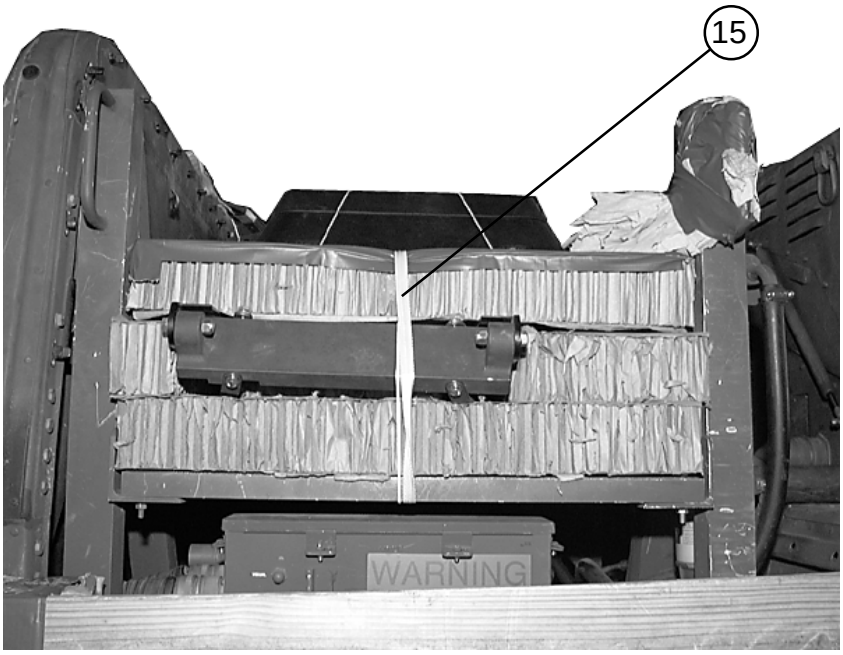

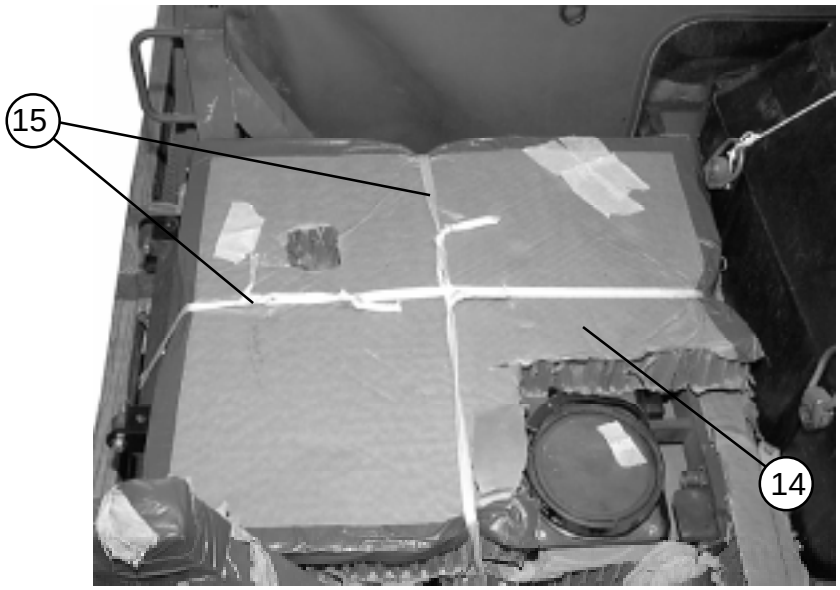

(14) Make an 8 1/2- by 11 1/2-inch cutout in a 27- by 24-inch piece of honeycomb. Place the honeycomb over the rack with the cutout clearing the round mount.

(15) Tape the upper edges of the honeycomb. Tie the honeycomb over the rack with 1/2-inch tubular nylon webbing. Route the webbing under the hopper step.

Figure 5-17. DVE Rigged in Cargo/Troop Carrier (continued)

CHAPTER 6

RIGGING TWO HMMWV TRUCKS ON A 32-FOOT PLATFORM FOR LOW-VELOCITY AIRDROP

DESCRIPTION OF LOAD

6-1. The unrigged M998 cargo/troop carriers (Figure 2-1) are described in Chapter 1. Two HMMWV trucks are rigged on a 32-foot type V platform for low-velocity airdrop. An accompanying load is rigged on the platform. The load requires five G-11 cargo parachutes.

The following trucks can be rigged using the procedures given in this chapter:
M998A1
M1038 and M1038A1
M1037 and M1037 modified
M1042
M1097, M1097A1, and M1097A2

PREPARING PLATFORM

6-2. Prepare a 32-foot, type V airdrop platform according to TM 10-1670-268-20&P/TO 13C7-52-22. Install two tandem links and eight suspension links to the platform as shown in Figure 6-1. Attach and number 44 clevis assemblies as shown in Figure 6-1.

NOTES: 1. The nose bumper may or may not be installed.
2. Measurements given in this chapter are from the front edge of the platform, NOT from the front edge of the nose bumper.

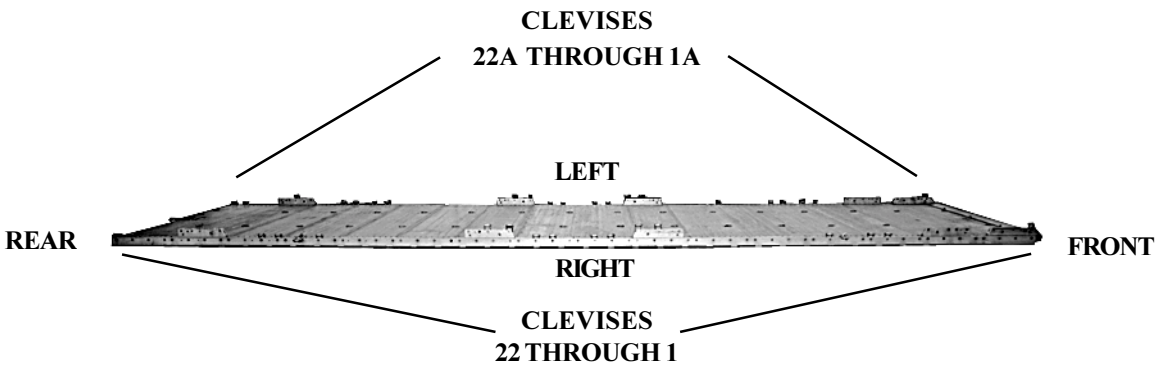

Step:

1. Install a tandem link on the front of each platform side rail using holes 1, 2, and 3.

2. Install a suspension link to each platform side rail using holes 6, 7, and 8.

3. Install a suspension link to each platform side rail using holes 26, 27, and 28.

4. Install a suspension link to each platform side rail using holes 37, 38, and 39.

5. Install a suspension link to each platform side rail using holes 57, 58, and 59.

6. Install a clevis on bushing 1 of each front tandem link.

7. Install a clevis on bushing 3 and 4 of each second suspension link.

8. Install a clevis on bushing 1 and 2 of each third suspension link.

9. Install a clevis on bushing 2 of each fourth suspension link.

10. Starting at the front of the platform, install clevises on each platform side rail using the bushings bolted on holes 11, 12, 15, 30, 31, 34, 35, 50, 53, 54, 63, and 64.

11. Install a clevis on bushings 14 and 51 in an inverted position. Install clevises on bushings 14A and 51A in the normal position. Bolt an additional clevis to each of these clevises.

12. Starting at the front of the platform, number the clevises bolted to the right side of the platform from 1 through 22, and those bolted to the left side from 1A through 22A. Number the clevises on the 14th and 51st bushings 4 and 4A, and 17 and 17A respectively. Number the clevises bolted to 4 and 4A as 5 and 5A. The clevises bolted to 17 and 17A are to be numbered 16 and 16A.

13. Label the tie-down rings according to FM 4-20.102/TO 13C7-1-5.

Figure 6-1. Platform Prepared

PREPARING AND POSITIONING HONEYCOMB STACKS

6.3. Prepare honeycomb stacks 1, 3, 5, and 7 as shown in Figure 2-3. Prepare honeycomb stacks 2 and 6 as shown in Figure 2-4. Position the stacks on the platform as shown in Figure 6-2.

Note: Honeycomb stack 4 consists of 2 full sheets of honeycomb stacked flush.

Notes: 1. This drawing is not drawn to scale.
2. Dimensions are given in inches.

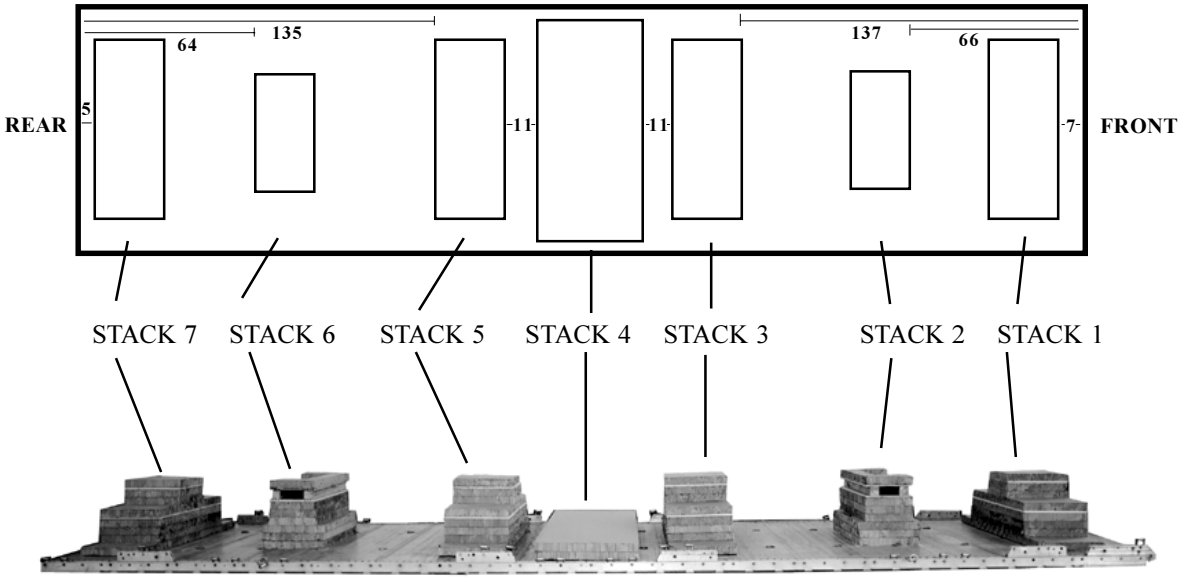

Stack Number	Position of Stack on Platform
	Place stack:
1	7 inches from the front edge of the platform and centered.
2	66 inches from the front edge of the platform and centered. Face the cutout to the front.
3	137 inches from the front edge of the platform and centered.
4	11 inches from stack 3 and centered.
5	135 inches from the rear edge of the platform and centered.
6	64 inches from the rear edge of the platform and centered. Face the cutout to the rear.
7	5 inches from the rear edge of the platform and centered.

Figure 6-2. Honeycomb Stacks Positioned On Platform

PLACING AND SECURING ACCOMPANYING LOAD

6-4. Place the ammunition boxes on stack 4, place a plywood cover, lash the boxes together (step 4), and construct two endboards as shown in Figure 6-3. Lash the accompanying load and endboards to the platform as shown in Figure 6-4.

Note: Adapt these procedures to accommodate other accompanying loads.

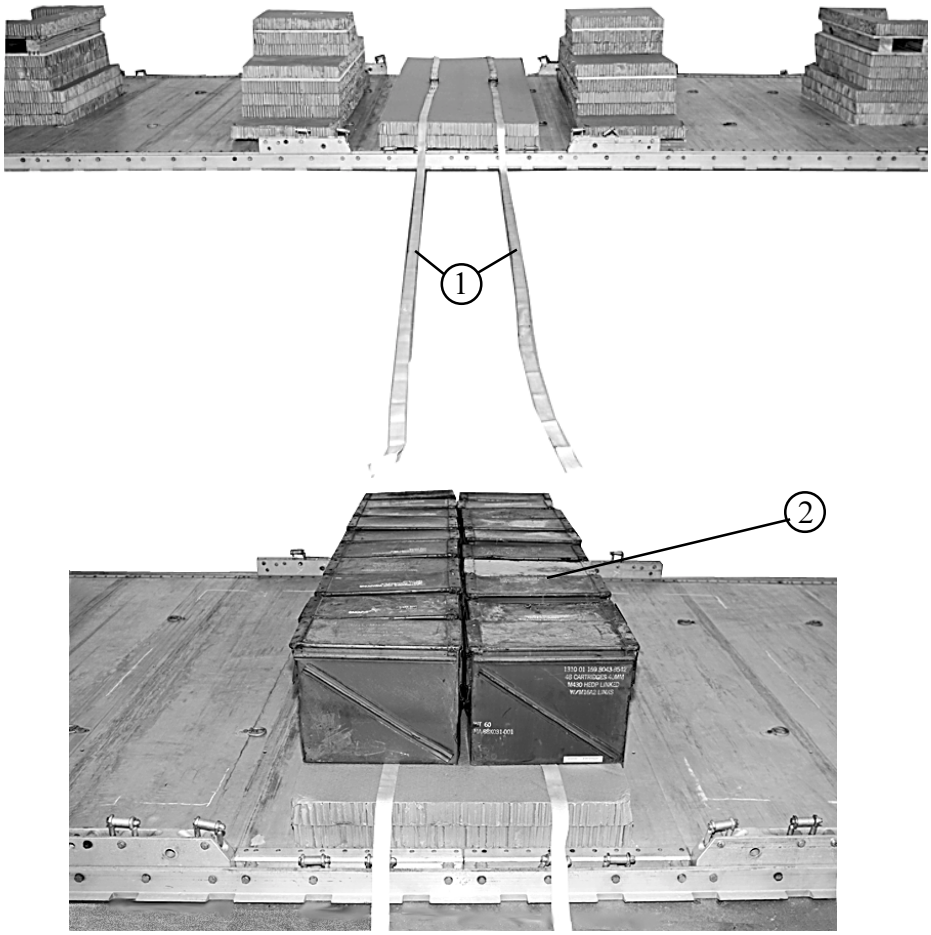

(1) Center two 30-foot lashings 8 inches from the front and rear edges of stack 4.

(2) Center 20 boxes of 20-mm ammunition on stack 4 over the lashings.

Figure 6-3. Ammunition Boxes Placed and Secured

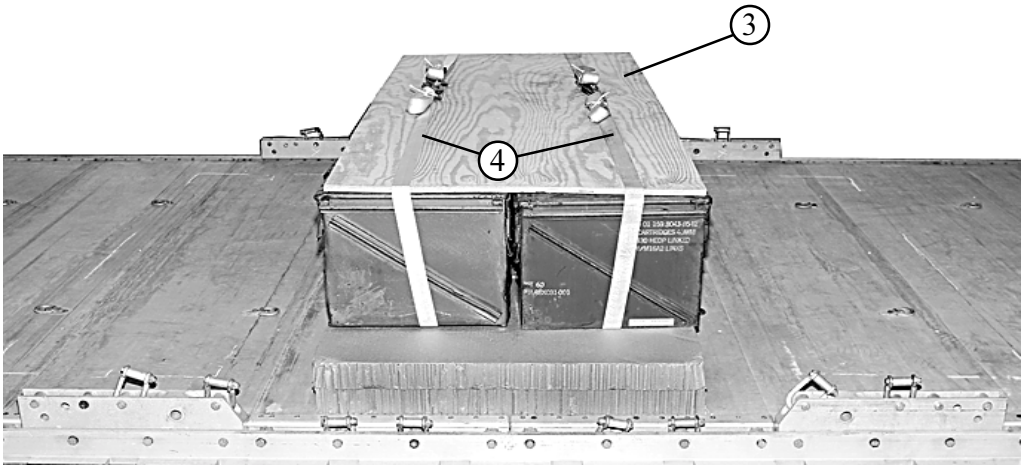

Notes 1. This drawing is not drawn to scale
2. All dimensions are in inches.

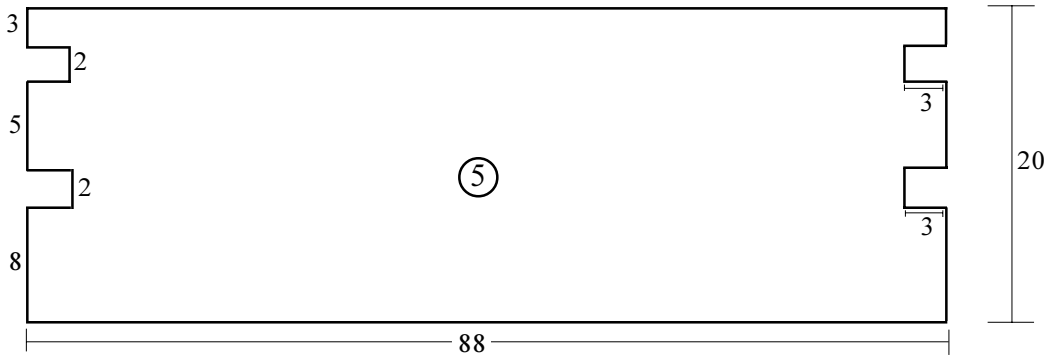

(3) Place a 3/4- by 36-by 82-inch piece of plywood flush over the ammunition boxes.

(4) Secure the 30-foot lashings placed in step 1 over the ammunition boxes.

(5) Construct two endboards from 3/4- by 20- by 88-inch plywood. Place an endboard at each end of the stack of boxes (shown in Figure 6-4).

Figure 6-3. Ammunition Boxes Placed and Secured (continued)

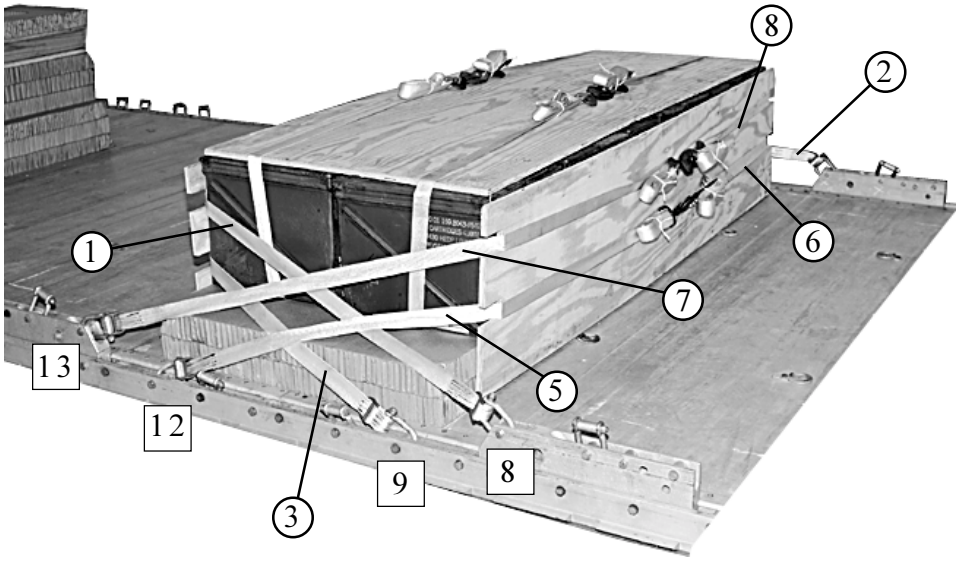

Lashing Number	Tie-down Clevis Number	Instructions
		Pass lashing:
1	8	Through clevis 8, through its own D-ring, and through the upper slot in the rear endboard.
2	8A	Through clevis 8A, through its own D-ring, and through the upper slot in the rear endboard. Secure lashings 1 and 2 together at the rear with two D-rings and a load binder.
3	9	Through clevis 9, through its own D-ring, and through the lower slot in the rear endboard.
4	9A	Through clevis 9A, through its own D-ring, and through the lower slot in the rear endboard. Secure lashings 3 and 4 together at the rear with two D-rings and a load binder.
5	13	Through clevis 13, through its own D-ring, and through the upper slot in the front endboard.
6	13A	Through clevis 13A, through its own D-ring, and through the upper slot in the front endboard. Secure lashings 5 and 6 together at the front with two D-rings and a load binder.
7	12	Through clevis 12, through its own D-ring, and through the lower slot in the front endboard.
8	12A	Through clevis 12A ,through its own D-ring, and through the lower slot in the front endboard. Secure lashings 7 and 8 together at the front with two D-rings and a load binder.

Figure 6-4. Ammunition and Endboards Lashed to Platform

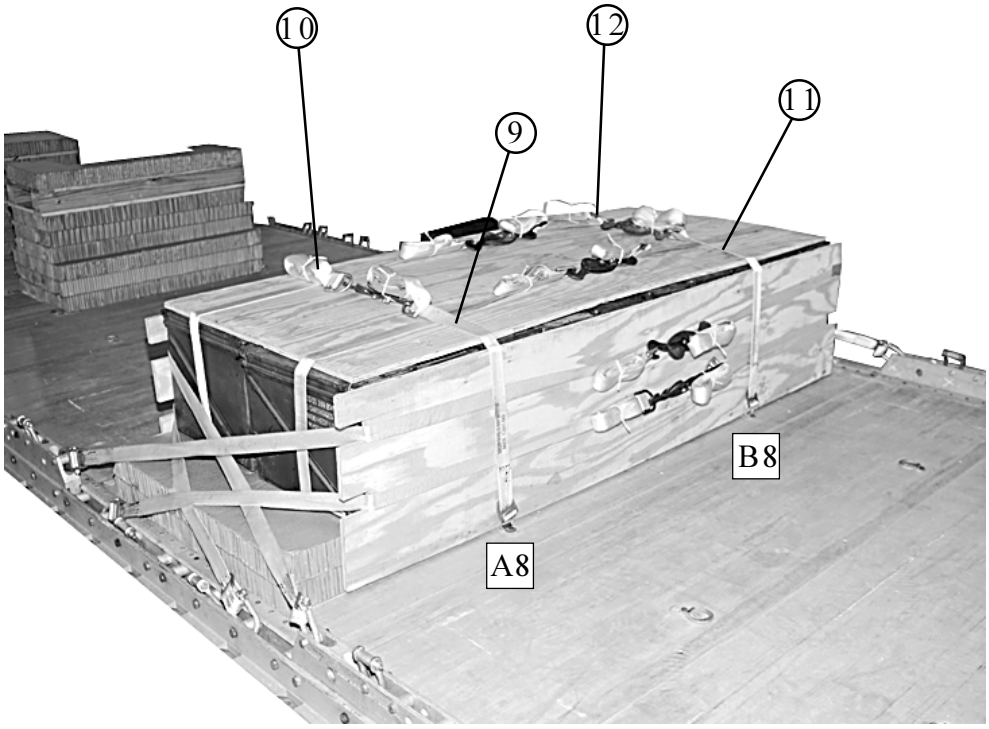

Lashing Number	Tie-down Ring Number	Instructions
		Pass lashing:
9	A8	Through deck tie-down ring A8 and through its own D-ring.
10	A10	Through deck tie-down ring A10 and through its own D-ring. Secure lashings 9 and 10 together on top of the boxes with two D-rings and a load binder.
11	B8	Through deck tie-down ring B8 and through its own D-ring.
12	B10	Through deck tie-down ring B10 and through its own D-ring. Secure lashings 11 and 12 together on top of the boxes with two D-rings and a load binder.

Figure 6-4. Ammunition and Endboards Lashed to Platform (continued)

INSTALLING OPTIONAL DRIVE-OFF AIDS ON PLATFORM

6-5. Install the optional drive-off aids in the direction in which the truck is to be driven off the platorm as shown in Figure 6-5, and according to FM 4-20.102/TO 13C7-1-5.

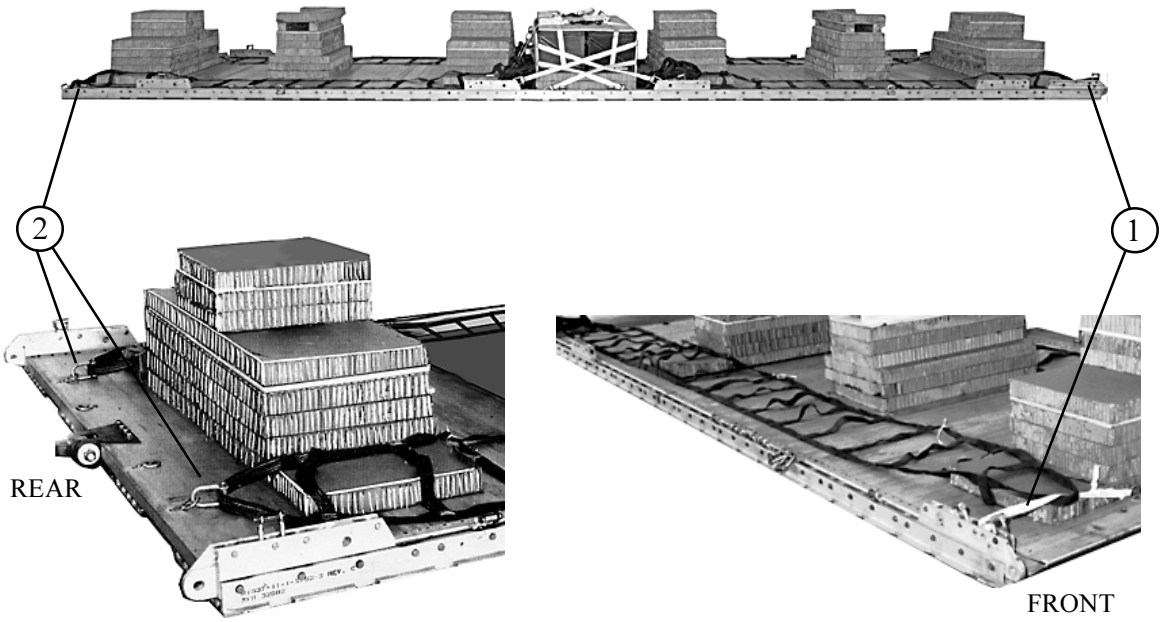

(1) Install the drive-off aids for the front truck using a length of type V nylon webbing tied to the second bushing of the tandem link and the nearest tie-down ring. Tie the knot as shown in FM 4-20.102/TO 13C7-1-5.

(2) Install the drive-off aids for the rear truck to tie-down rings A16 and D16 using type V clevises as shown.

Figure 6-5. Drive-off Aids Installed on Platform

PREPARING AND LOADING TRUCKS

6-6. Prepare and load the trucks as described below.

a. Prepare both trucks according to the preparation procedures in Chapter 2 of this manual.

b. Omit Step 6, Figure 2-10 for both trucks.

c. Omit the parachute release platform for the front truck (Figure 2-13, step 1).

d. Prepare the parachute release platform and place it on the rear truck as shown in Figure 6-6.

e. Use or adapt the procedures in Figure 2-14 of this manual to rig loads in the trucks. For this load, the trucks may be left empty.

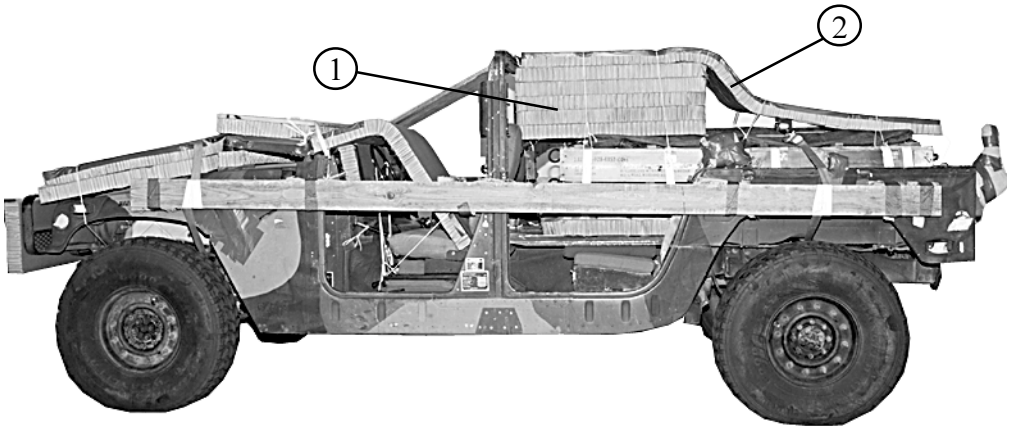

1 Glue as many pieces of 36- by 24-inch honeycomb flush together as necessary to bring the load to 3 inches below the height of the B-pillar.

2 Place a full sheet of honeycomb flush over the stack, extending it to the rear of the truck. Tie all the honeycomb to convenient points on the load with type III nylon cord. Tape the honeycomb where the cord passes over it.

Note: It may be necessary to level the acompanying load to allow for the parachute release platform.

Figure 6-6. Parachute Release Platform Installed on Rear Truck

LIFTING AND POSITIONING TRUCK AND INSTALLING OPTIONAL DRIVE-OFF AIDS

6-7. Install the lifting slings as shown in Figure 2-16 of this manual. Position the trucks on the platform as shown in Figure 6-7 below. Attach the optional drive-off aids to the wheels of the trucks according to FM 4-20.102/TO 13C7-1-5, and as shown in Figure 2-17 of this manual.

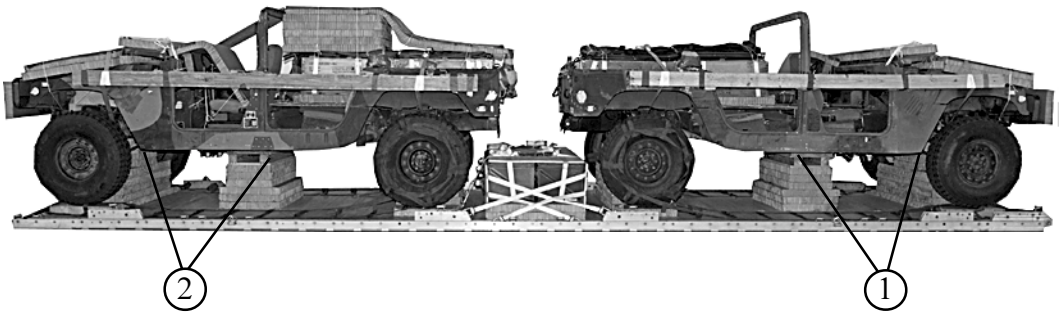

1. Face the front truck toward the front of the platform. Be sure the suspension cross members rest squarely on stacks 1 and 3. Be sure that the frame cross member rests squarely on the 6-inch part of the honeycomb at the rear of stack 2.

2. Face the rear truck toward the rear of the platform. Be sure the suspension cross members rest squarely on stacks 5 and 7. Be sure that the frame cross member rests squarely on the 6-inch part of the honeycomb at the front of stack 6.

Figure 6-7. Lifting Slings Installed and Trucks Positioned

LASHING TRUCKS

6-8. Lash the trucks to the platform as shown in Figures 6-8 through 6-11, and according to FM 4-20.102/TO 13C7-1-5.

Note: Right and left in this figure refer to the right and left sides of the trucks.

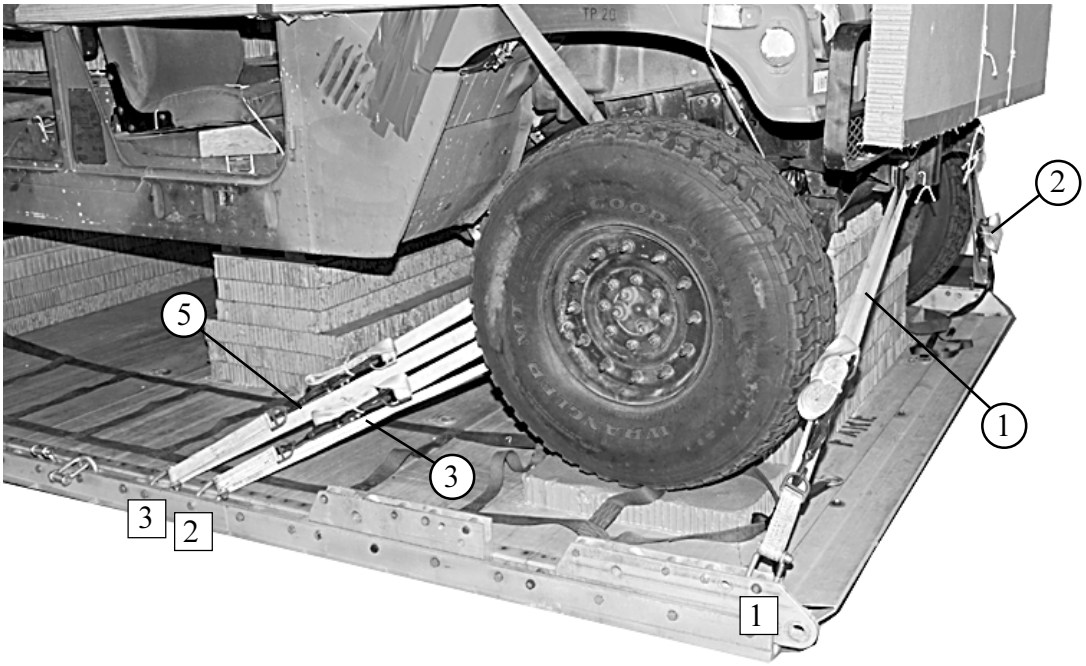

Lashing Number	Tie-down Clevis Number	Instructions
		Pass lashing:
1	1	Through right lifting shackle on front bumper.
2	1A	Through left lifting shackle on front bumper.
3	2	Around right front lower control arm.
4	2A	Around left front lower control arm.
5	3	Through tie-down bracket behind right front coil spring.
6	3A	Through tie-down bracket behind left front coil spring.

Figure 6-8. Lashings 1Through 6 Installed

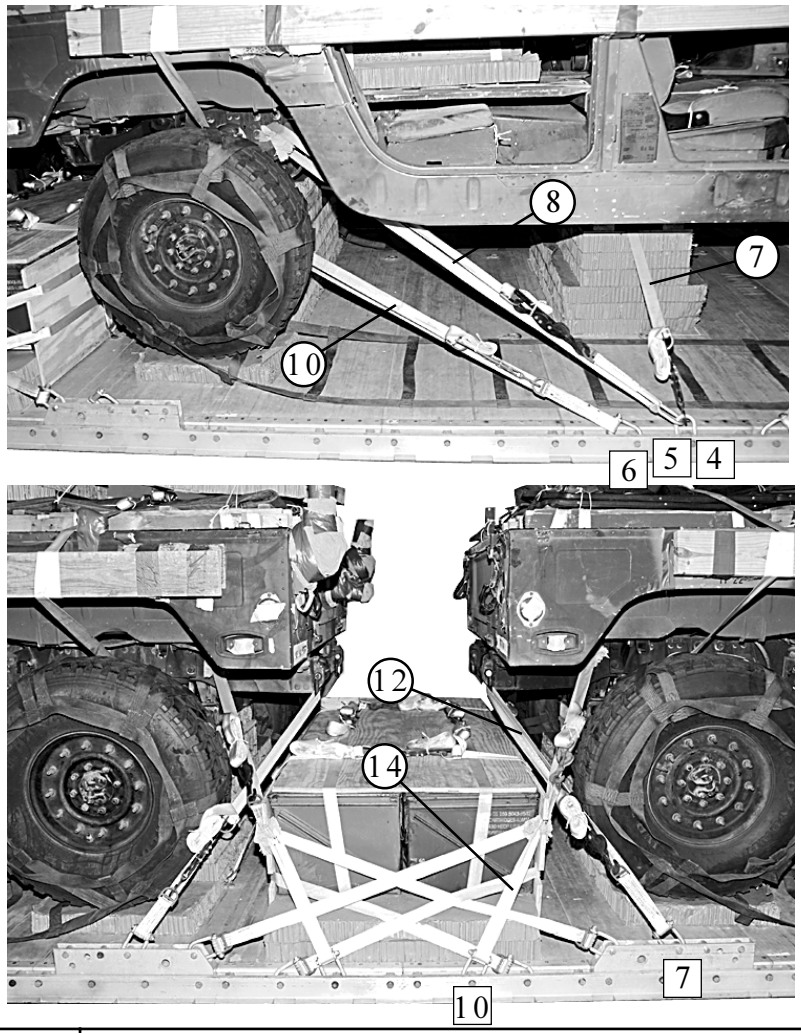

Lashing Number	Tie-down Clevis Number	Instructions
		Pass lashing:
7	4 and 4A	Pass a 15-foot lashing through clevis 4A and through its own D-ring. Pass the lashing through the hole in stack 2. Attach the lashing to clevis 4 with a load binder.
8	5	Around the right upper control arm.
9	5A	Around the left upper control arm.
10	6	Around the right lower control arm.
11	6A	Around the left lower control arm.
12	7	Through the right rear tie-down shackle.
13	7A	Through the left rear tie-down shackle.
14	10	Through the tie-down bracket behind the right rear coil spring.
15	10A	Through the tie-down bracket behind the left rear coil spring.

Figure 6-9. Lashings 7 through 15 Installed

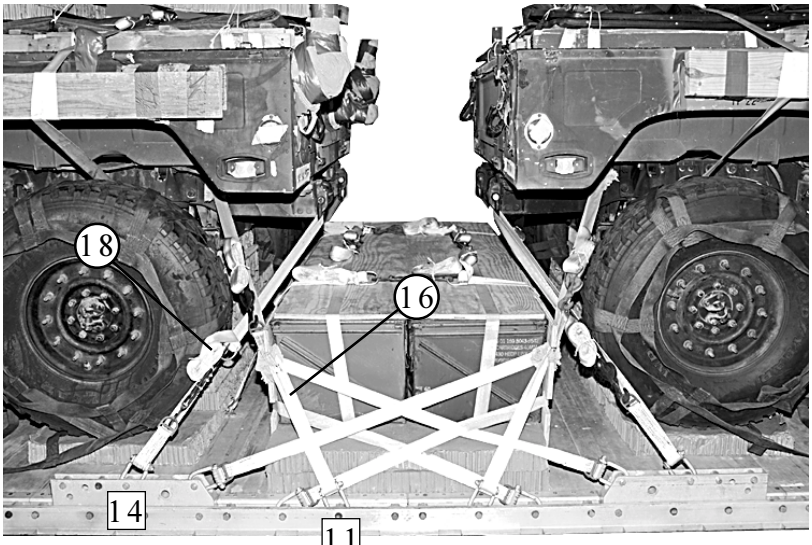

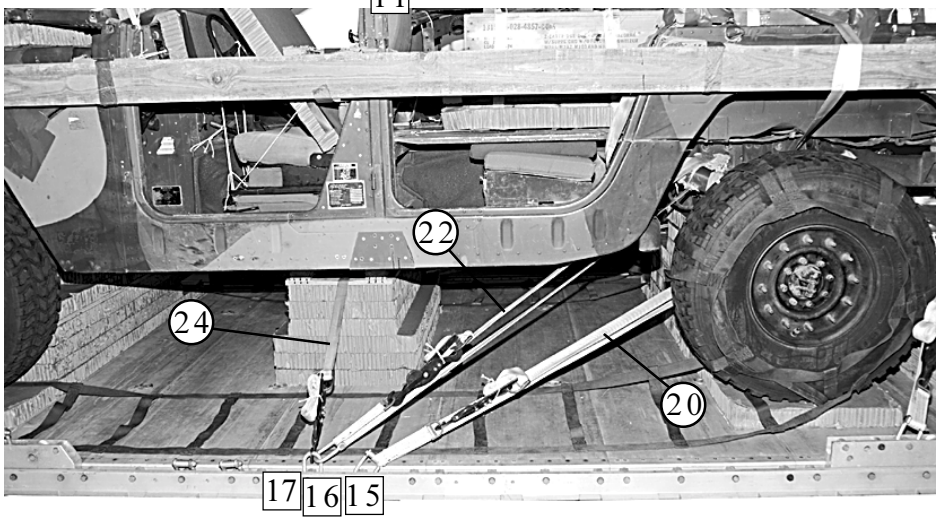

Lashing Number	Tie-down Clevis Number	Instructions
		Pass lashing:
16	11	Through tie-down bracket behind left rear coil spring.
17	11A	Through tie-down bracket behind right rear coil spring.
18	14	Through left lifting shackle on rear bumper.
19	14A	Through right lifting shackle on rear bumper.
20	15	Around left lower control arm.
21	15A	Around right lower control arm.
22	16	Around left upper control arm.
23	16A	Around right upper control arm.
24	17 and 17A	Pass a 15-foot lashing through clevis 17A and through its own D-ring. Pass the lashing through the hole in stack 6. Attach the lashing to clevis 17 with a load binder.

Figure 6-10. Lashings 16 Through 24 Installed

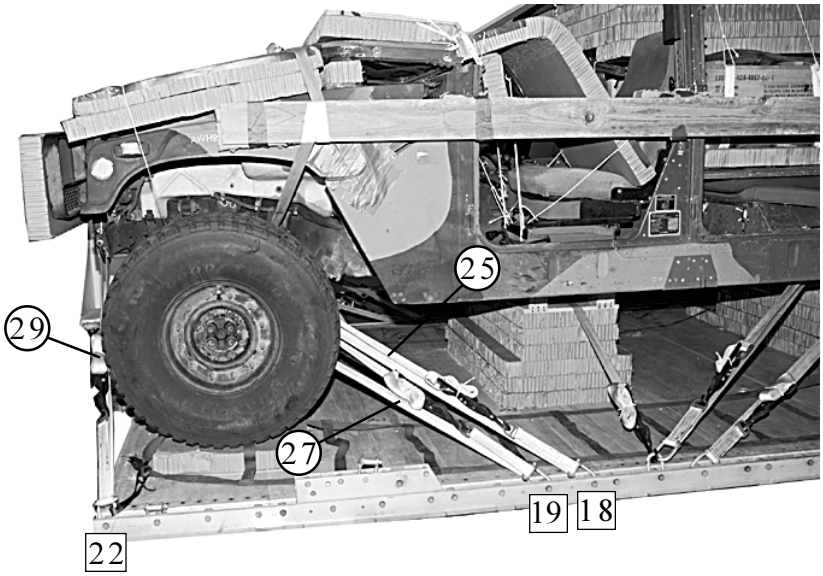

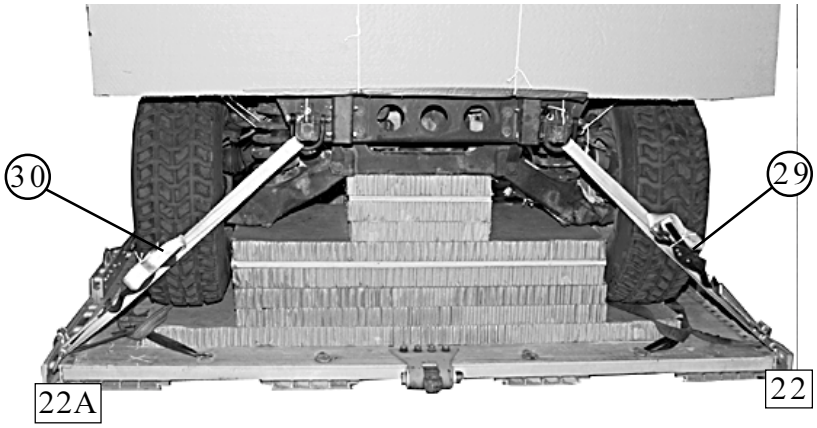

Lashing Number	Tie-down Clevis Number	Instructions
		Pass lashing:
25	18	Through tie-down bracket behind left front coil spring.
26	18A	Through tie-down bracket behind right front coil spring.
27	19	Around left front lower control arm.
28	19A	Around right front lower control arm.
29	22	Through left lifting shackle on front bumper.
30	22A	Through right lifting shackle on front bumper.

Figure 6-11. Lashings 25 through 30 Installed

INSTALLING AND SAFETY TYING SUSPENSION SLINGS

6-9. Install the suspension slings according to FM 4-20.102/TO 13C7-1-5, and as shown in Figure 6-12. Pad and safety tie the suspension slings as shown in Figure 6-13.

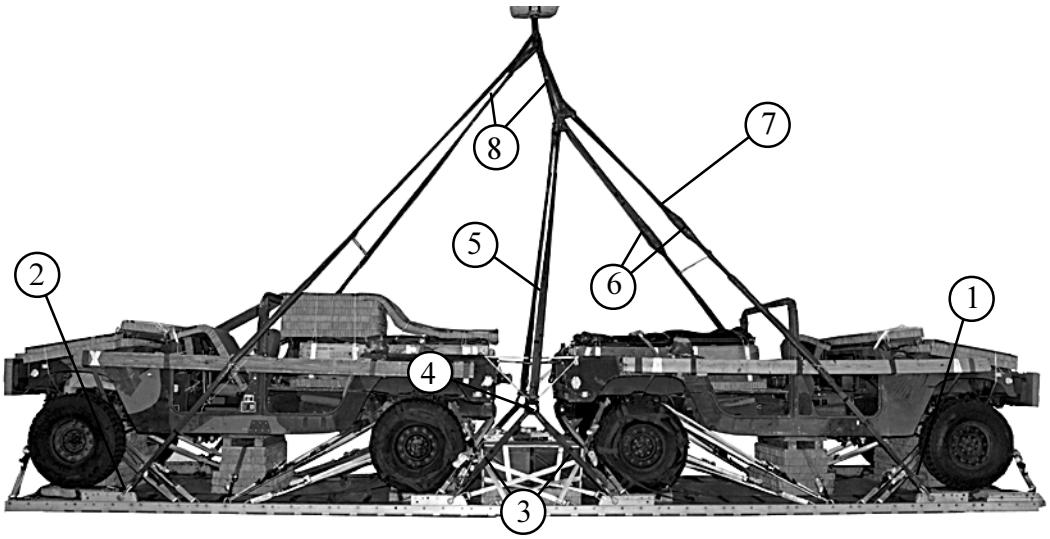

1. Attach an 11-foot (4-loop), type XXVI nylon webbing suspension sling to each first suspension link with a large clevis.
2. Attach a 20-foot (4-loop), type XXVI nylon webbing suspension sling to each fourth suspension link with a large clevis.
3. Attach a 3-foot (4-loop), type XXVI nylon webbing sling to each second and third suspension link with a large clevis.
4. Place the 3-foot slings installed in step 3 above in the bell of a large clevis, one clevis per platform side.
5. Route a 20-foot (2-loop), type XXVI nylon webbing sling around one spool of a three-point link. Place both end loops in the bolt of the large clevis installed in step 4 above. Repeat for the other side of the load.
6. Place a 3 3/4-inch two-point link in the end loop of each front suspension sling.
7. Route an 11-foot (2-loop), type XXVI nylon webbing sling around one spool of the three-point link placed in step 5 above so that a free spool remains at the top of the link. Place both end loops in the remaining spool of the two-point link installed in step 6 above. Repeat for the other side of the load.
8. Join the three-point link to the crane hook with a 3-foot (4-loop) type XXVI nylon sling. Place the rear suspension slings in the crane hook. Repeat for the other side of the load.

Figure 6-12. Suspension Slings Installed

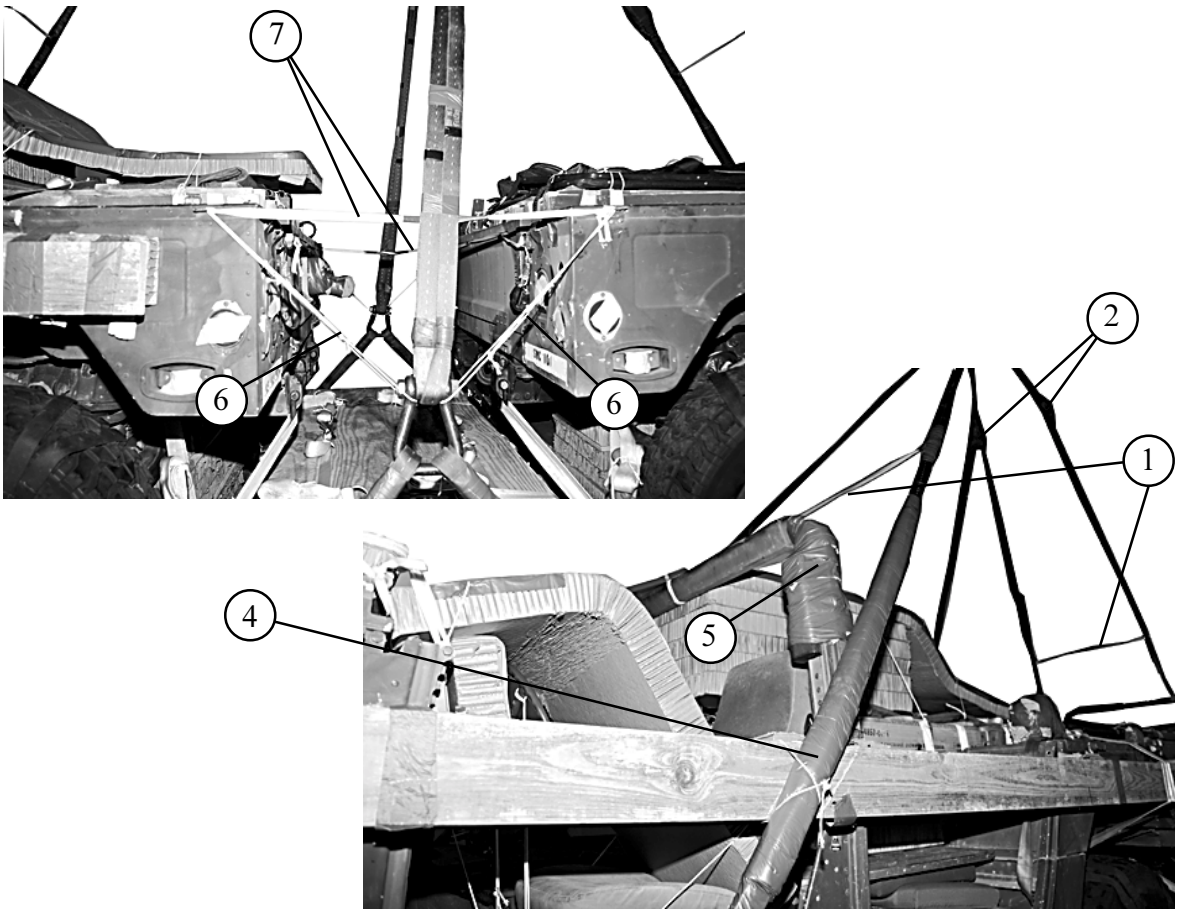

1. Make anti-tumble ties on the front and rear suspension slings using the instructions for the deadman's tie in FM 4-20.102/TO 13C7-1-5.
2. Wrap all links with felt taped in place.
3. Wrap the front suspension slings between 50 and 104 inches along the slings with felt taped in place. Secure the slings to the truck sideboards with type III nylon cord (not shown).
4. Wrap the rear suspension slings between 47 and 97 inches along the slings with felt taped in place. Secure the slings to the truck sideboards with type III nylon cord.
5. Pad both truck B-pillars with cellulose wadding and tape in place.
6. Support the large clevises on both center suspension slings with 1/2-inch tubular nylon webbing tied to convenient points on the trucks.
7. Tie an additional length of 1/2-inch tubular nylon webbing between convenient points on the two trucks to safety the suspension slings to the outside.

Figure 6-13. Suspension Slings Padded and Safety Tied

BUILDING AND INSTALLING PARACHUTE STOWAGE PLATFORM

6-10. Build and install the parachute stowage platform as shown in Figure 6-14.

Notes: 1. This drawing is not drawn to scale.
2. All dimensions are in inches.

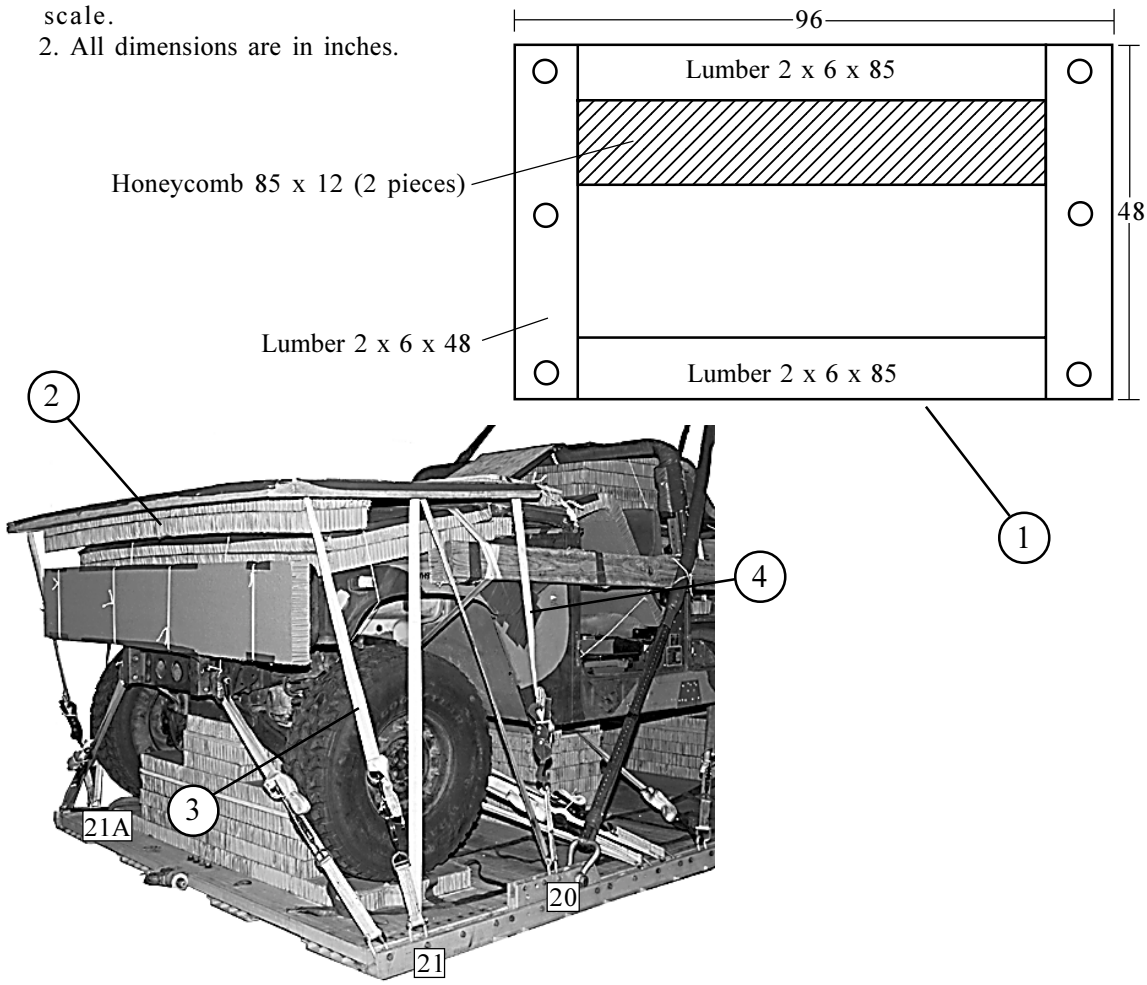

1. Construct the parachute stowage platform using a 96- by 48-inch piece of 3/4-inch plywood and 2- by 6-inch lumber as shown. Glue two 85- by 12-inch pieces of honeycomb to the underside flush against the outside piece of 2- by 6-inch lumber.

2. Place the parachute stowage platform on the hood of the rear truck with the honeycomb placed in step 1 above facing the rear.

3. Lash the two rear holes in the platform to clevises 21 and 21A.

4. Lash the two front holes in the platform to clevises 20 and 20A.

Figure 6-14. Parachute Stowage Platform Constructed and Installed

STOWING CARGO PARACHUTES

6-11. Use five G-11 cargo parachutes on this load. Prepare and stow the cargo parachutes as shown in Figure 6-15.

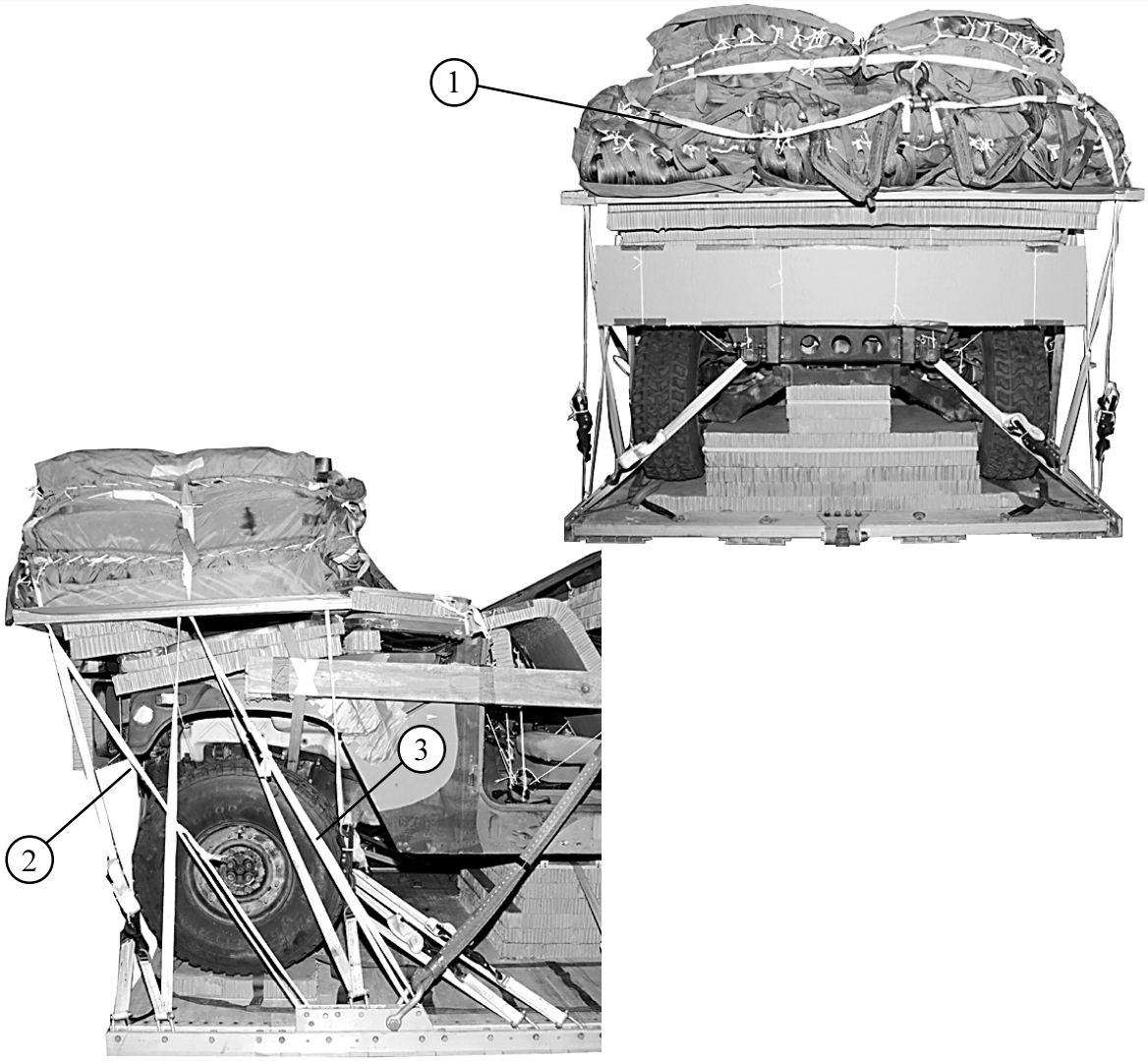

1. Prepare five G-11 cargo parachutes and stow them on the parachute stowage platform. Prepare and stow the parachutes according to FM 4-20.102/TO 13C7-1-5.

2. Tie the rear parachute restraint strap to the fourth bushing on the fourth suspension link on each side.

3. Tie the front parachute restraint strap to the first bushing on the fourth suspension link on each side.

Figure 6-15. G-11 Cargo Parachutes Stowed

INSTALLING PARACHUTE RELEASE

6-12. Prepare and install an M-2 cargo -parachute release according to FM 4-20.102/TO 13C7-1-5, and as shown in Figure 6-16.

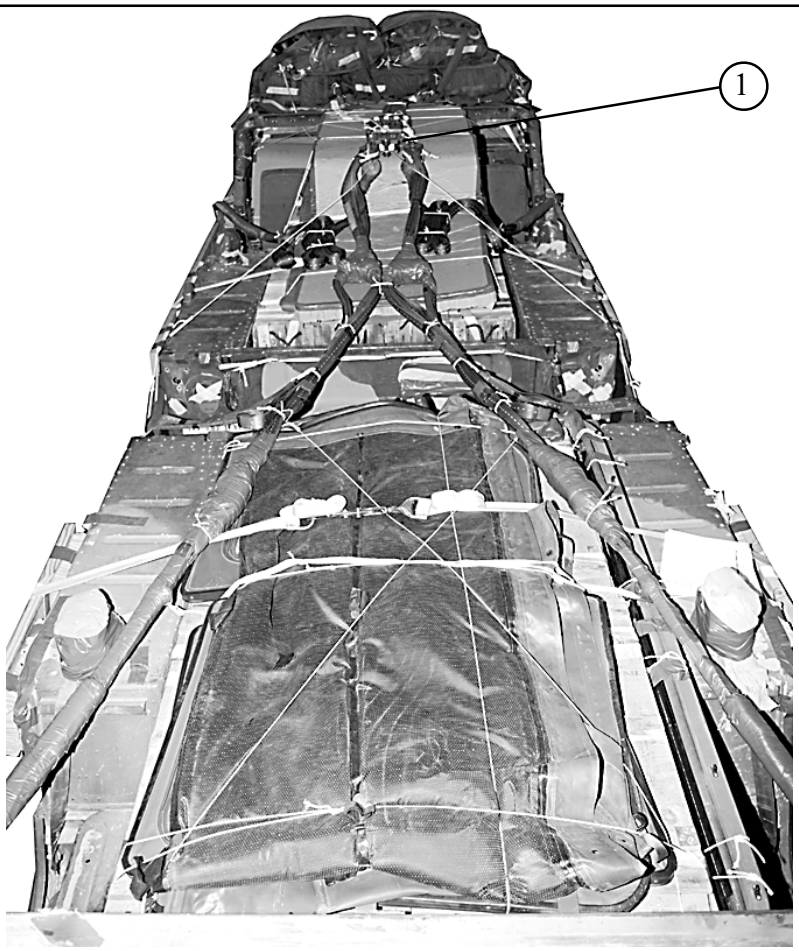

View from front of load

1 Place the M-2 release on the parachute release platform. Tie it to convenient points on the load with type III nylon cord.

Figure 6-16. M-2 Cargo Parachute Release Installed

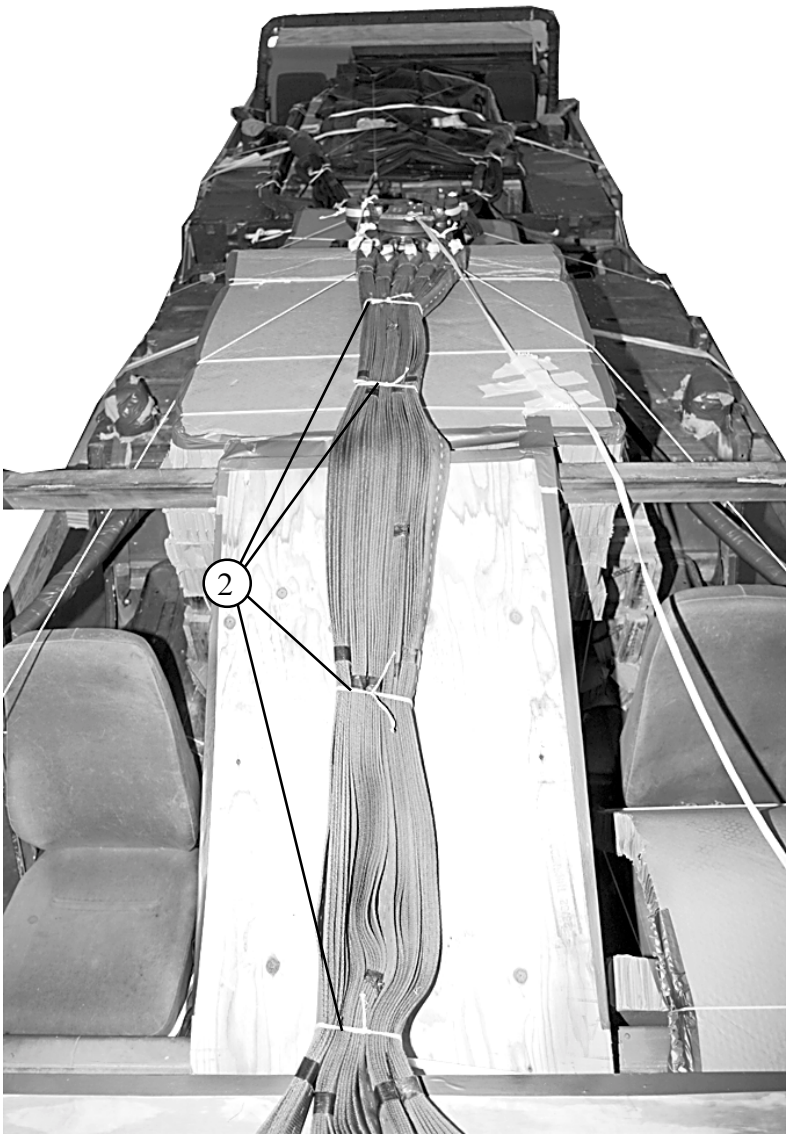

View from rear of load

(2) Tie the riser extensions in four places, equally spaced, with type I, 1/4-inch cotton webbing.

Figure 6-16. M-2 Cargo Parachute Release Installed (continued)

INSTALLING EXTRACTION SYSTEM

6-13. Install the EFTC according to FM 4-20.102/TO 13C7-1-5, and as shown in Figure 6-17.

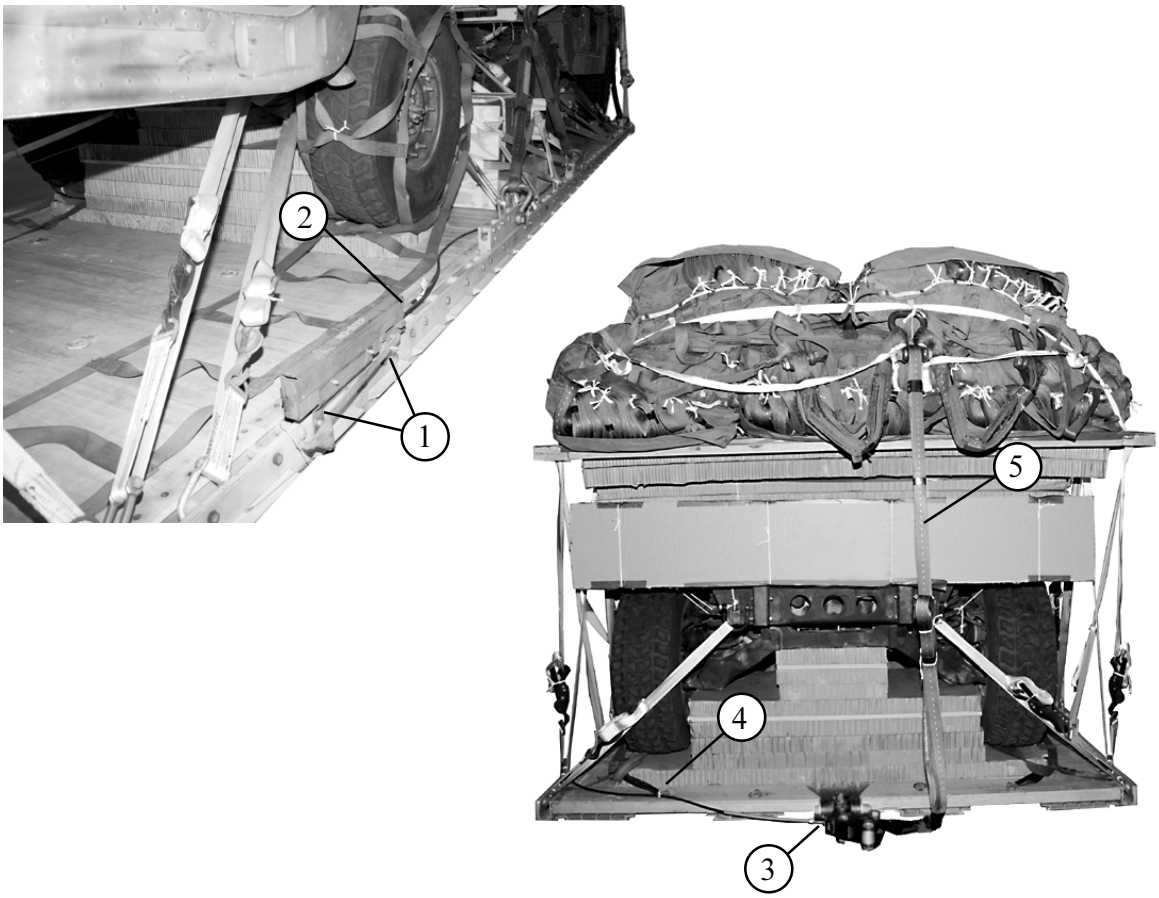

1. Install the EFTC mounting brackets in the rear mounting holes in the left platform rail.
2. Attach a 28-foot release cable to the actuator. Attach the actuator to the EFTC mounting brackets.
3. Install the latch assembly to the extraction bracket. Attach the release cable to the latch assembly.
4. Safety tie the cable to tie-down ring D16 and to other points as needed with type I, 1 1/4-inch cotton webbing.
5. Install a 9-foot (2-loop), type XXVI nylon webbing deployment line on the load.

Figure 6-17. EFTC Installed

INSTALLING PROVISIONS FOR EMERGENCY RESTRAINTS

6-14. Select and install provisions for emergency restraint according to the emergency aft restraint requirements table in FM 4-20.102/TO 13C7-1-5.

PLACING EXTRACTION PARACHUTE

6-15. Select the extraction parachute and extraction line needed using the extraction line requirements table in FM 4-20.102/TO13C7-1-5. Rig the extraction line in an extraction line bag according to TM 10-1670-286-20/TO 13C5-2-41. Place the extraction parachute and extraction line on the load for installation in the aircraft.

MARKING RIGGED LOAD

6-16. Mark the rigged load according to FM 4-20.102/TO 13C7-1-5 and as shown in Figure 6-18. Complete Shipper's Declaration for Dangerous Goods according to AFJMAN 24-204/TM 38-250. If the load varies from the one shown, the weight, height, CB, tip-off curve, and parachute requirements must be recomputed.

EQUIPMENT REQUIRED

6-17. Use the equipment listed in Table 6-1 to rig this load. The equipment for rigging an accompanying load in the trucks is NOT given in Table 6-1.

CAUTION
Make the final rigger inspection required by FM 4-20.102/TO 13C7-1-5 before the load leaves the rigging site.

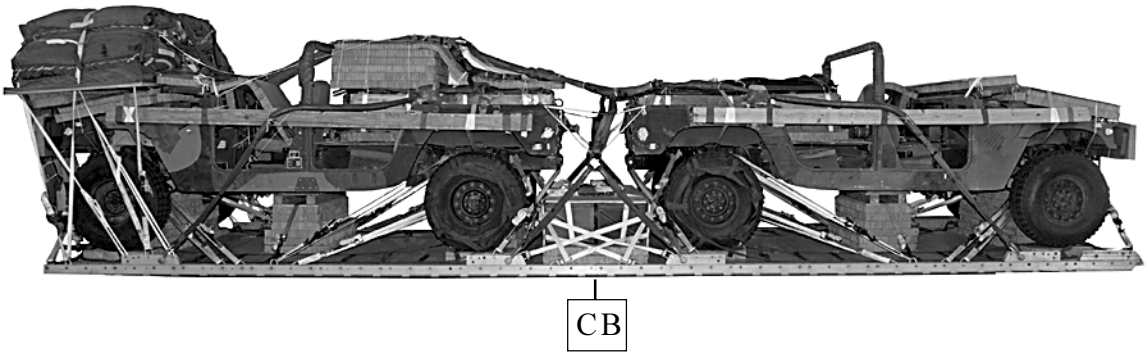

RIGGED LOAD DATA

Weight: Load shown	21,200 pounds
Maximum load allowed	26,250 pounds
Height (with five G-11 parachutes)	96 inches
Width	108 inches
Length (overall)	409 inches
Overhang: Front	0 inches
Rear (EFTC)	18 inches
CB (from front edge of platform)	207 inches

Figure 6-18. Two M998 Trucks and Ammunition Rigged on a 32-Foot Type V Platform

Table 6-1. Equipment Required for Rigging Two M998 Trucks and Ammunition for Low-Velocity Airdrop

National Stock Number	Item	Quantity
8040-00-273-8713	Adhesive, paste, 1-gal	As required
4030-00-090-5354	Clevis, suspension, 1-in (large)	18
4020-00-240-2146	Cord, nylon, type III, 550-lb	As required
1670-01-326-7309	Coupling assembly, airdrop, extraction force transfer with cable, 28-ft	1
	Cover:	
1670-00-360-0328	Clevis, large	5
8135-00-664-6958	Cushioning material, packaging, cellulose wadding	As required
8305-00-958-3685	Felt, 1/2-in thick	As required
1670-01-183-2678	Leaf, extraction line (line bag)	2
	Line, drogue (for C-17)	
1670-01-062-6313	60-ft (3-loop), type XXVI	1
	Line, extraction:	
1670-01-062-6313	For C-130: 60-ft (3-loop), type XXVI	1
1670-01-107-7651	For C-141: 140-ft (3-loop), type XXVI	1
	For C-5:	
1670-01-062-6313	60-ft, (3-loop), type XXVI and	1
1670-01-107-7651	140-ft (3-loop), type XXVI	1
	For C-17:	
1670-01-107-7651	140-ft (3-loop), type XXVI	1
	Link Assembly:	
	Two-point:	3
5306-00-435-8994	Bolt, 1-in diam, 4-in long	(6)
5310-00-232-5165	Nut, 1-in, hexagonal	(6)
1670-00-003-1953	Plate, side, 3 3/4-in	(6)
5365-00-007-3414	Spacer, large	(6)
	Lumber:	
5510-00-220-6448	2- by 6-in	As required
5510-00-220-6274	4- by 4-in	As required
5315-00-010-4659	Nail, steel wire, 8d	As required

Table 6-1. Equipment Required for Rigging Two M998 Trucks and Ammunition for Low-Velocity Airdrop (continued)

National Stock Number	Item	Quantity
1670-00-753-3928	Pad, energy-dissipating (honeycomb) 3- by 36- by 96-in	28 sheets
	Parachute:	
	Cargo:	
1670-01-016-7841	G-11B	5
	Cargo extraction:	
1670-00-040-8135	28-ft (Add H-block for use with C-17 aircraft)	1
	Drogue (for C-17)	
1670-01-063-3715	15-ft	1
	Platform, airdrop, type V, 32-ft	
1670-01-353-8425	Bracket assembly, EFTC	(1)
1670-01-162-2372	Clevis assembly, type V	(46)
1670-01-162-2376	Bracket assembly, extraction	(1)
1670-01-247-2389	Link, suspension bracket, type V	(8)
1670-01-162-2381	Tandem link assembly (Multipurpose link)	(2)
5530-00-128-4981	Plywood, 3/4-in	7 sheets
1670-01-097-8817	Release, cargo parachute, M-2	1
	Sling, cargo, airdrop	
	For suspension:	
1670-01-062-6306	3-ft (4-loop), type XXVI nylon webbing	6
1670-01-063-7760	11-ft (2-loop), type XXVI nylon webbing	2
1670-01-062-6310	11-ft (4-loop), type XXVI nylon webbing	2
1670-01-062-6302	20-ft (2-loop), type XXVI nylon webbing	2
1670-01-064-4453	20-ft (4-loop), type XXVI nylon webbing	2
	For lifting:	
1670-01-062-6304	9-ft (2-loop), type XXVI nylon webbing	2
1670-01-062-6303	12-ft (2-loop), type XXVI nylon webbing	2
	For deployment:	
1670-01-062-6304	9-ft (2-loop), type XXVI nylon webbing	1
	For riser extension:	
1670-01-062-6311	120-ft (2-loop), type XXVI nylon webbing	5
5340-00-040-8219	Strap, parachute release, multi-cut, comes w/ 3 knives	2
7510-00-266-5016	Tape, adhesive, 2-in	As required
1670-00-937-0271	Tie-down assembly, 15-foot	58
1670-01-344-0825	Vehicle drive-off aid	2
	Webbing:	
8305-00-268-2411	Cotton, 1/4-in, type I	As required
8305-00-082-5752	Nylon, tubular, 1/2-in	As required
No NSN	Type V	As required
8305-00-263-3591	Type VIII	As required

CHAPTER 7

RIGGING GROUND MOBILITY VEHICLE ON A 16-FOOT PLATFORM FOR LOW-VELOCITY AIRDROP

DESCRIPTION OF LOAD

7-1. The Ground Mobility Vehicle is a modified M1025 HMMWV-series truck. It has a winch, a rigid roof, and a turret to support weapons. It is rigged the same as the M998 truck except as noted. The truck is rigged on a 16-foot, type V airdrop platform for low-velocity airdrop. The truck is configured to carry a special operations load. The accompanying load shown weighs 2,140 pounds. The load shown requires three G-11 cargo parachutes.

PREPARING PLATFORM

7-2. Prepare a 16-foot, type V airdrop platform according to TM 10-1670-268-20&P/TO 13C7-52-22. Install four tandem links and 18 load tie-down clevises according to FM 4-20.102/TO 13C7-1-5, and as shown in Figure 7-1.

NOTES:
1. The nose bumper may or may not be installed.
2. Measurements given in the instructions for this load are from the front edge of the platform, NOT from the front edge of the nose bumper.

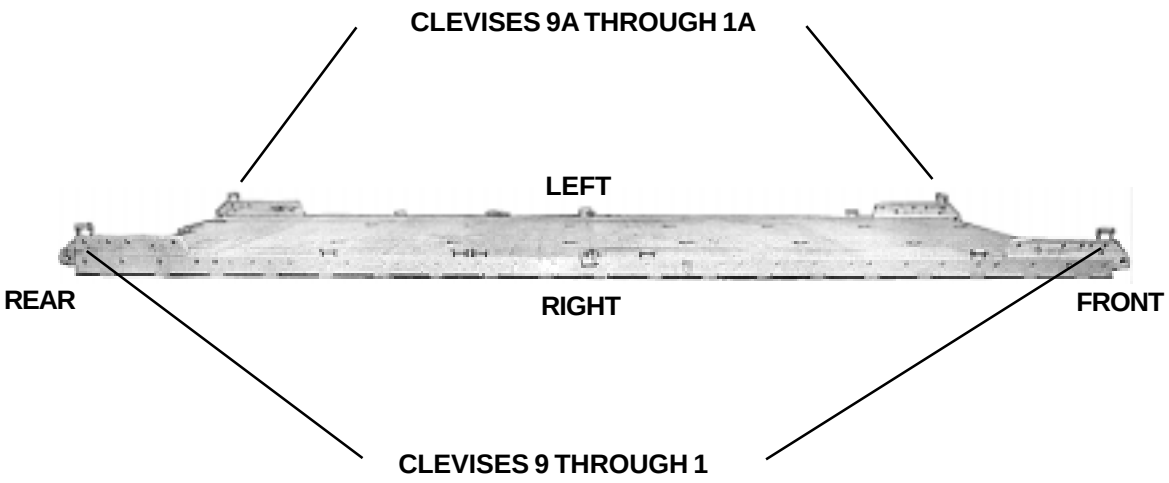

Step:

1. Install a tandem link on the front of each platform side rail using holes 1, 2, and 3.
2. Install a tandem link on the rear of each platform side rail using holes 30, 31, and 32.
3. Install a clevis on bushing 1 of each front tandem link.
4. Install a clevis on bushing 4 of each rear tandem link.
5. Starting at the front of the platform, install clevises on each platform side rail using the bushings bolted on holes 5, 15, 20, 21 and 25.
6. Install a clevis on bushing 17 in an inverted position. Install a bushing on clevis 17A in the normal position. Bolt an additional clevis to each of these clevises.
7. Starting at the front of the platform, number the clevises bolted to the right side of the platform from 1 through 9, and those bolted to the left side from 1A through 9A. Number the clevises on the 17th bushings 5 and 5A. Number the clevises bolted to these clevises clevises 4 and 4A.
8. Label the tie-down rings according to FM 4-20.102/TO 13C7-1-5.

Figure 7-1. Platform Prepared

PREPARING AND POSITIONING HONEYCOMB STACKS

7-3. Prepare three honeycomb stacks as shown in Figures 2-3 and 2-4. Position the stacks on the platform as shown in Figure 2-5, and according to FM 4-20.102/TO 13C7-1-5.

PREPARING TRUCK AND STOWING LOAD

7-4. Prepare the truck as described in paragraphs 2-4a through d, g, and h, and as shown in Figures 2-6 and 2-7, 2-8 (omit step 1), 2-11, and 2-12. Use the procedures in Figures 7-2 through 7-9 to rig the specialized load and to further prepare the truck.

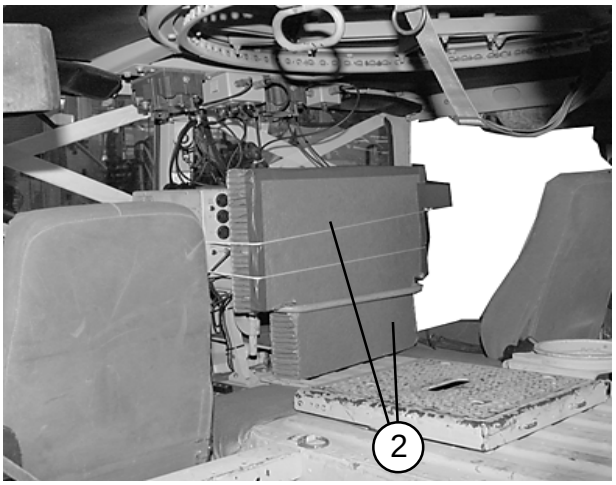

1 Roll the light scattering screen (LSS) netting and tie it to the roof supports on the sides and in front.

2 Cover the radios with two pieces of honeycomb tied in place with type III nylon cord.

Figure 7-2. Truck Prepared

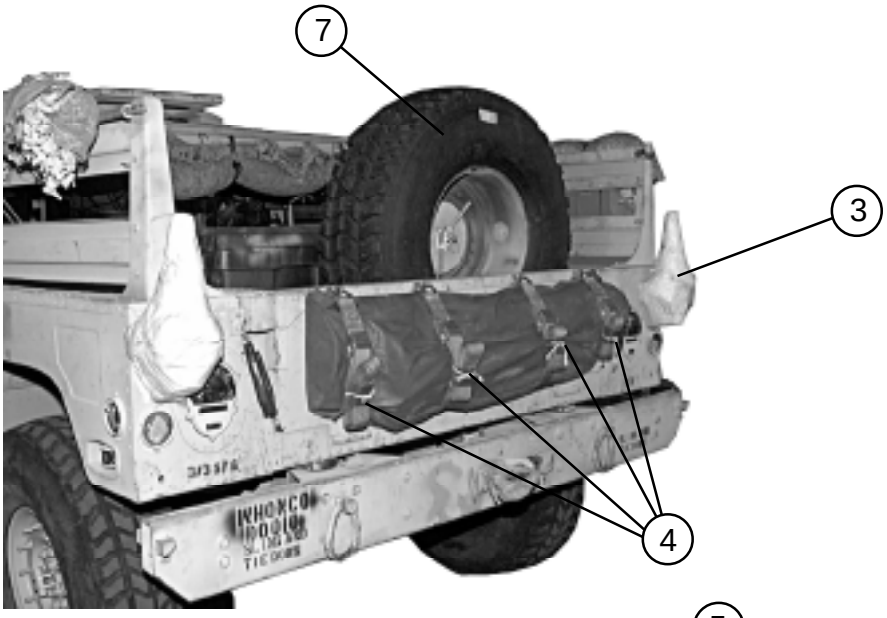

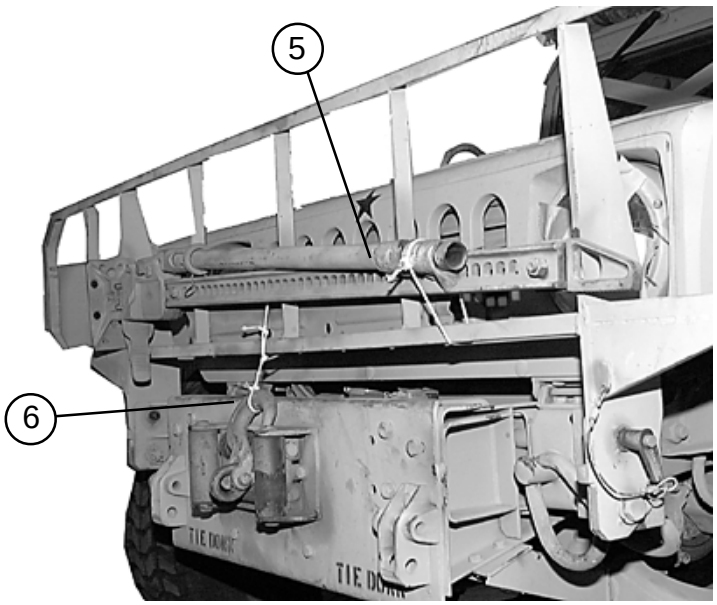

(3) Pad the antenna mounts at the rear of the truck with cellulose wadding and tape in place.

(4) Secure the LSS pole bag on the tailgate with the straps provided. Secure the strap fasteners and excess strap with type III nylon cord.

(5) Secure the jack and its handle to the brush guard with type III nylon cord.

(6) Tie the winch hook to the brush guard with type III nylon cord.

(7) Be sure the spare wheel is securely bolted to its mount.

Figure 7-2. Truck Prepared (continued)

Notes: 1. This drawing is not drawn to scale.
2. All dimensions are in inches.

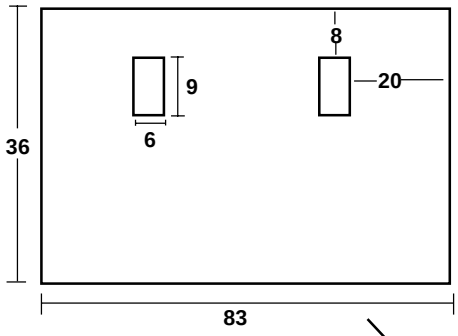

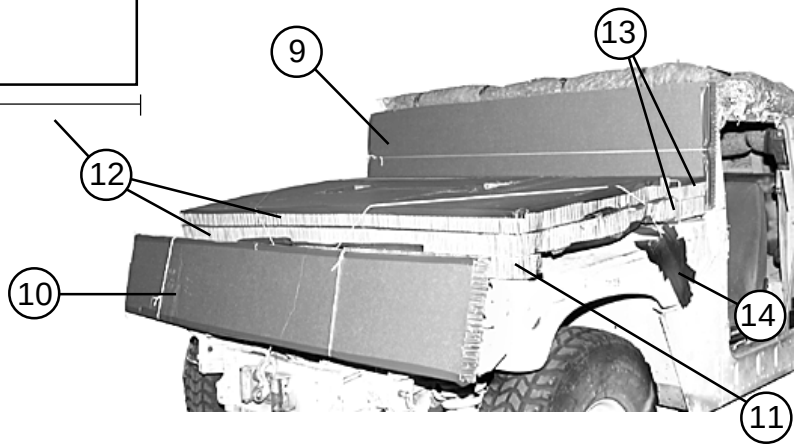

(8) Tape the windshield inside and outside as shown.

(9) Cover the windshield with an 83- by 21-inch piece of honeycomb. Tape the short edges and tie the honeycomb around the windshield with type III nylon cord.

(10) Tie an 83- by 14-inch piece of honeycomb over the brush guard and the items tied to it with type III nylon cord.

(11) Place a 78- by 4-inch piece of honeycomb along the front edge of the hood.

(12) Place two 36- by 83-inch pieces of honeycomb, with cutouts as shown, over the hood. Tape the upper edges of the top piece. Tie the honeycomb in place with a length of type III nylon cord. Tie the cord to an airlift bracket, pass it through the grille, and tie it off to the other airlift bracket.

(13) Place two 12- by 83-inch pieces of honeycomb just behind the honeycomb placed in step 12. Tape the top outside edges. Secure the honeycomb to the hood latch brackets with type III nylon cord.

(14) Tape the hood latches.

Figure 7-2. Truck Prepared (continued)

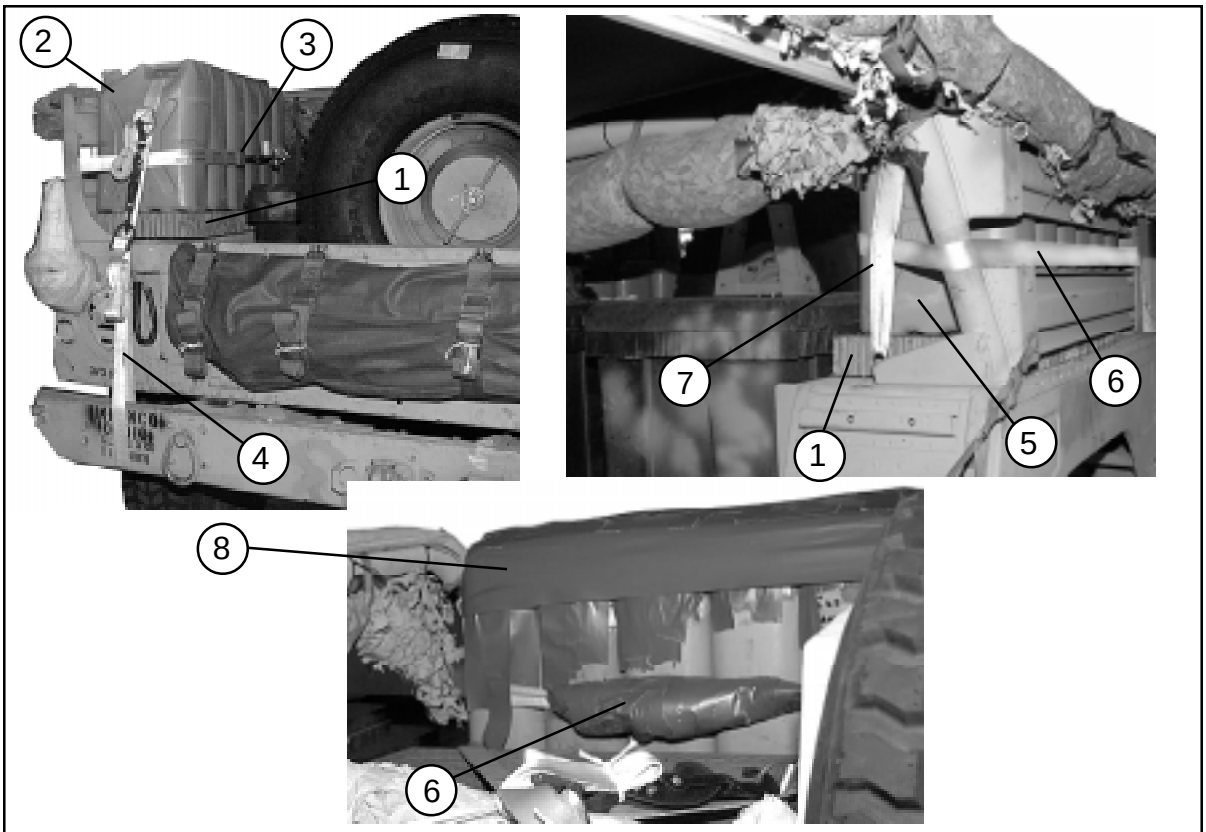

1. Place a 14- by 45-inch piece of honeycomb flush over each wheel well.
2. Place six filled water cans flush over the honeycomb on the left side, handles facing inward.
3. Route a lashing around the cans and vertical frame members, and fasten the lashing on the inside with a load binder.
4. Route a 30-foot lashing through the can handles, through the ring in front of the cargo area seat, and back through the can handles. Pass the free end of the lashing around the rear bumper and back to the rear of the cans. Fasten the lashing with two D-rings and a load binder.
5. Place six fuel cans 95% full flush over the honeycomb on the right wheel well, handles facing inside.
6. Route a lashing around the cans and vertical frame members, and fasten the lashing on the inside with a load binder. Place cellulose wadding and tape around the load binder.
7. Route a 30-foot lashing through the can handles, through the ring in front of the right cargo area seat, and back through the can handles. Pass the free end of the lashing through the ring at the rear of the seat and up to the top of the cans. Fasten the lashing with two D-rings and a load binder. Pad the load binder with cellulose wadding.
8. Pad the tops of the fuel cans with cellulose wadding and tape in place.

Figure 7-3. Water and Fuel Cans Stowed and Secured

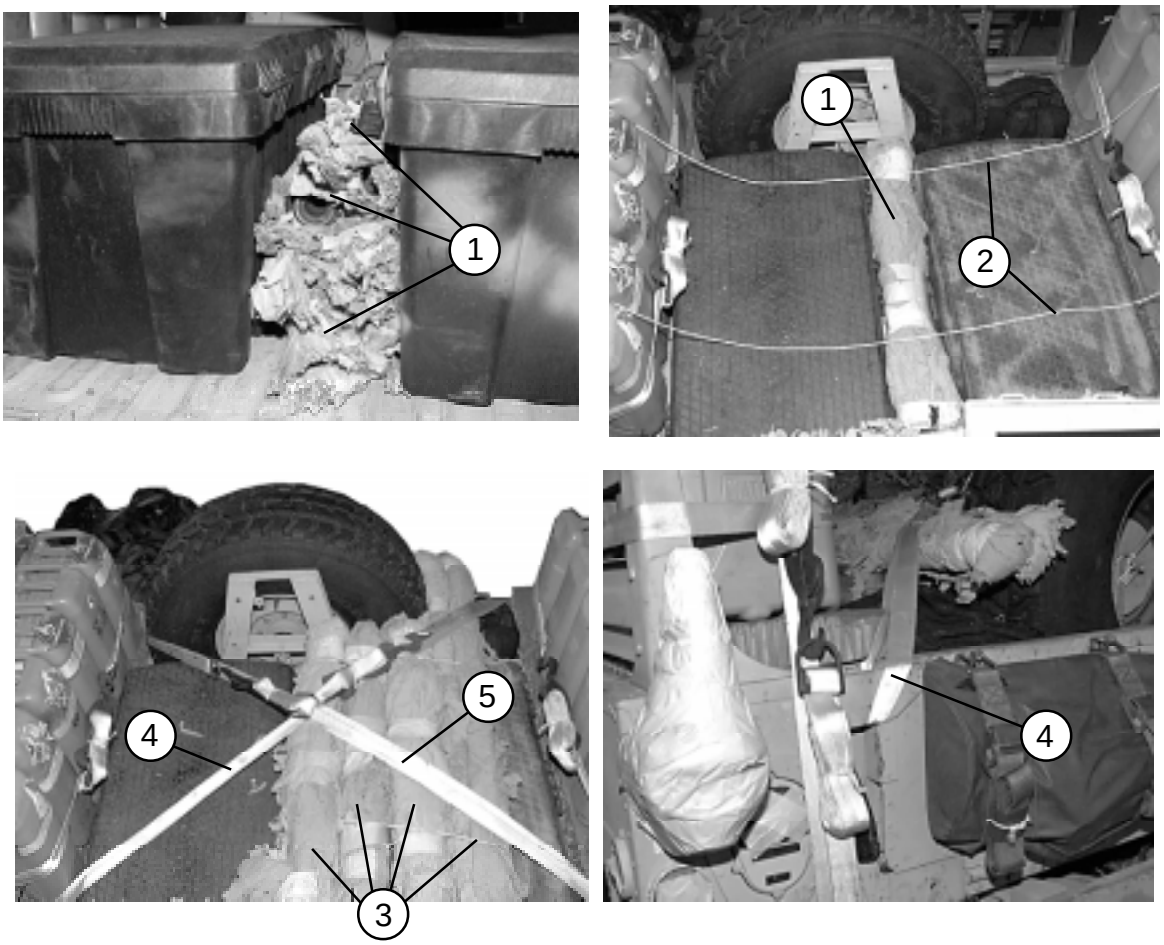

1. Wrap six light anti-tank weapons (LAW) and two AT4's individually with cellulose wadding. Place them between the two mounted cargo boxes.
2. Place two lengths of type III nylon cord over the cargo boxes.
3. Wrap three AT4's and two Javelins individually with cellulose wadding. Secure them together with the type III nylon cord placed in step 2.
4. Pass a lashing through the left tailgate sling guide and over the weapons and cargo boxes. Pass the lashing through the ring on the inside front of the right cargo compartment seat. Fasten the lashing on top of the weapons and boxes.
5. Pass a lashing through the right tailgate sling guide and over the weapons and cargo boxes. Pass the lashing through the ring on the inside front of the left cargo compartment seat. Fasten the lashing on top of the weapons and boxes.

Figure 7-4. Stowing Weapons Between and Over Cargo Boxes

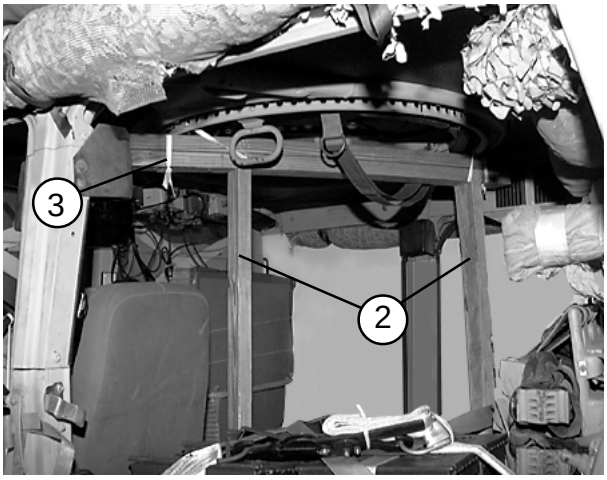

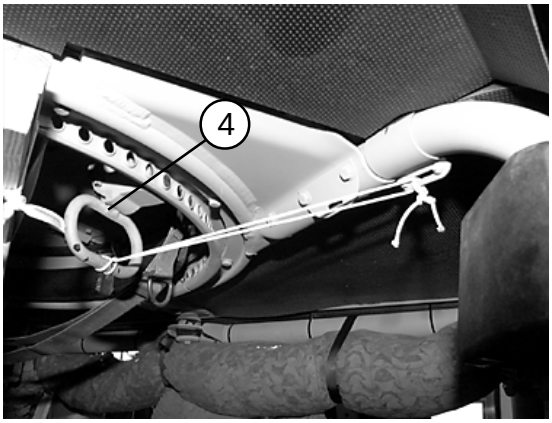

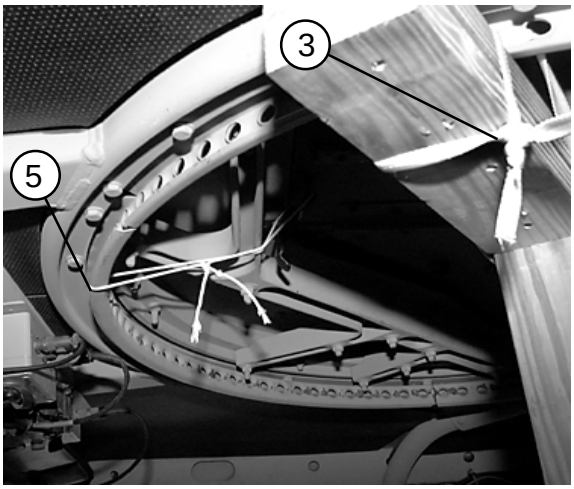

1. Construct the turret support as shown in Figure 3-2 of this manual.
2. Center the turret support under the turret at a 45-degree angle, in a left front to right rear direction.
3. Tie the turret support to convenient points on the turret with 1/2-inch tubular nylon webbing.
4. Tie the weapon station brake in the DOWN position with type III nylon cord.
5. Secure the three turret latches to holes in the turret ring with type III nylon cord.

Figure 7-5. Turret Support Placed and Secured

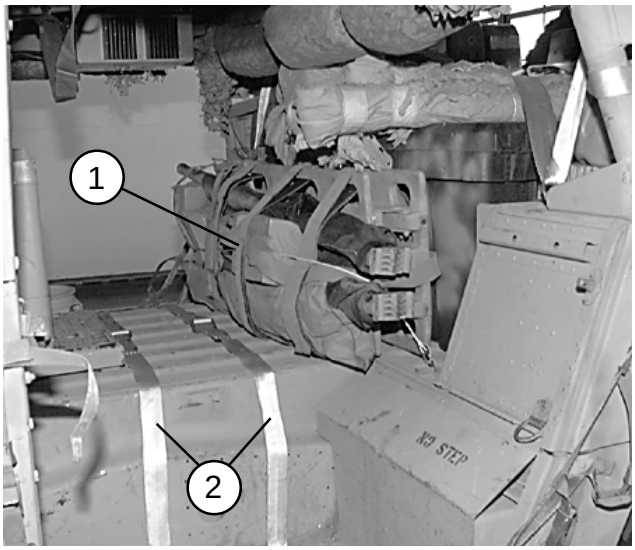

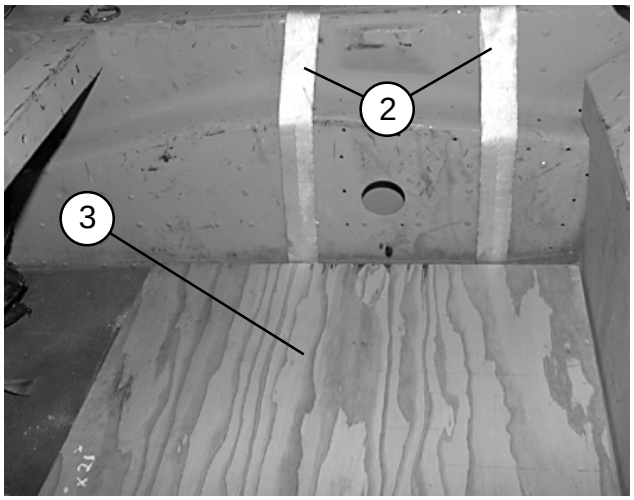

1. Place the stretcher in front of the cargo bed boxes and secure it to the front cargo bed rings with type III nylon cord.
2. Place two 30-foot lashing across the truck bed in front of the stretcher. Extend the lashings down into the passenger seat footwells.
3. Place a 3/4- by 21- by 25-inch piece of plywood in the left rear passenger seat footwell.
4. Place a 3/4- by 21- by 30-inch piece of plywood in the right rear passenger seat footwell (not shown).

Figure 7-6. Ammunition and Refrigerator Area Prepared

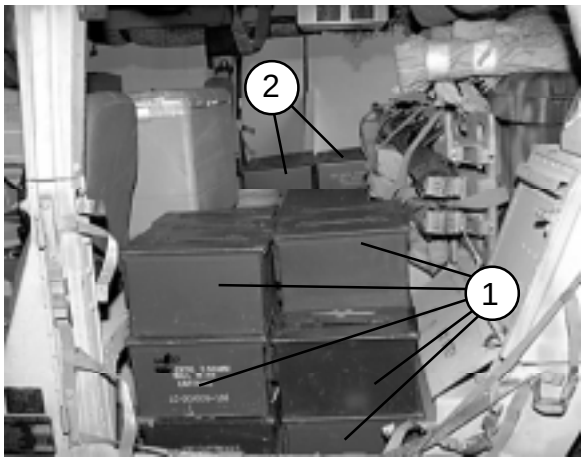

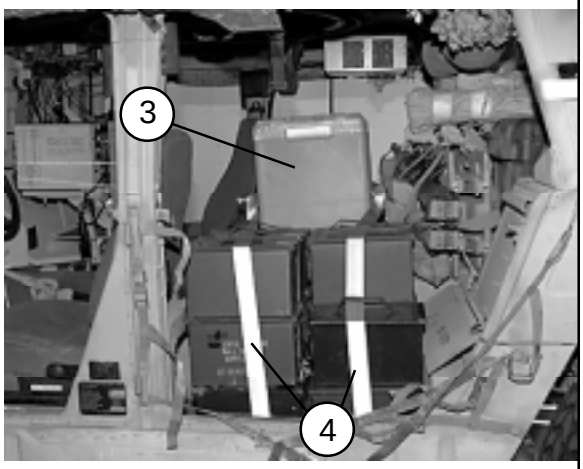

Note: Ammunition boxes should be well padded with felt or cellulose wadding. Padding is not shown here for purposes of clarity.

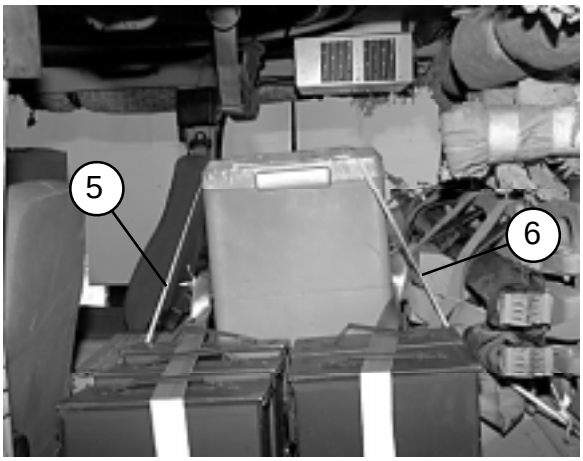

1. Place seventeen 5.56-mm ammunition cans in the left footwell over the plywood.
2. Place eighteen 5.56-mm ammunition cans in the right footwell over the plywood.
3. Set the refrigerator on an 11- by 22-inch piece of honeycomb in front of the stretcher and between the stacks of ammunition boxes.
4. Pass the lashings placed in Figure 7-6, step 2 over the ammunition boxes. Pass the lashings through the box carrying handles whenever possible. Secure the lashings with load binders in the front and rear of the refrigerator.
5. Tie a length of 1/2-inch tubular nylon webbing to the ring behind and inside the driver's seat. Pass the webbing over the refrigerator, and tie it securely to the ring on the inside front of the right rear passenger seat.
6. Tie a length of 1/2-inch tubular nylon webbing to the ring behind and inside the front passenger seat. Pass the webbing over the refrigerator, and tie it securely to the ring on the inside front of the left rear passenger seat.

Figure 7-7. Ammunition and Refrigerator Stowed

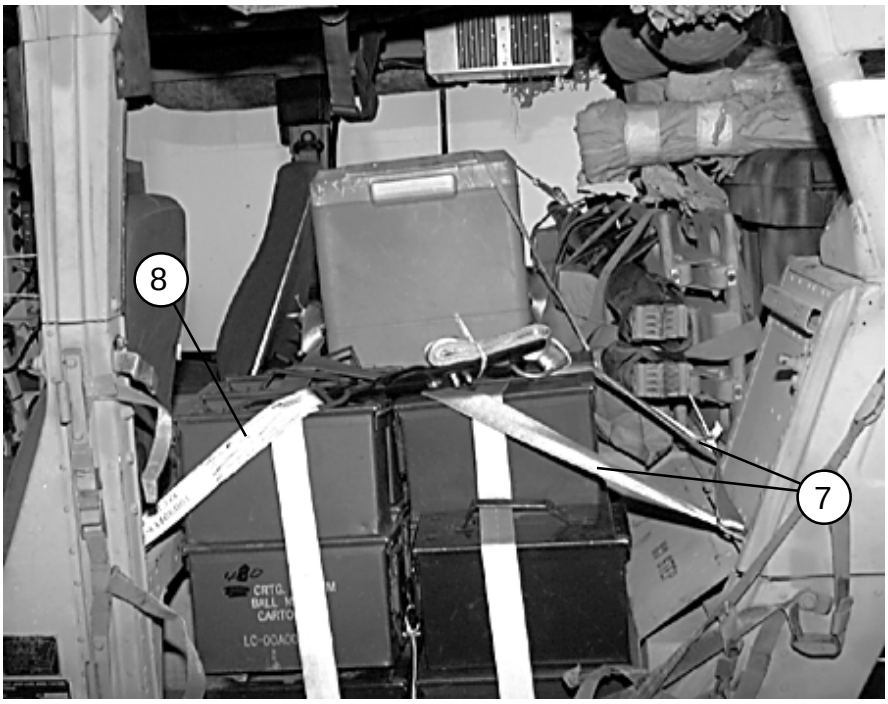

7 Pass a lashing through both rings behind the right passenger seat, up over the ammunition boxes, and through both rings behind the left rear passenger seat. Secure the lashing with a load binder on top of the boxes.

8 Pass a lashing through both rings behind the driver's seat, up over the ammunition boxes, and through both rings behind the right rear passenger seat. Secure the lashing with a load binder on top of the boxes.

Figure 7-7. Ammunition and Refrigerator Stowed (continued)

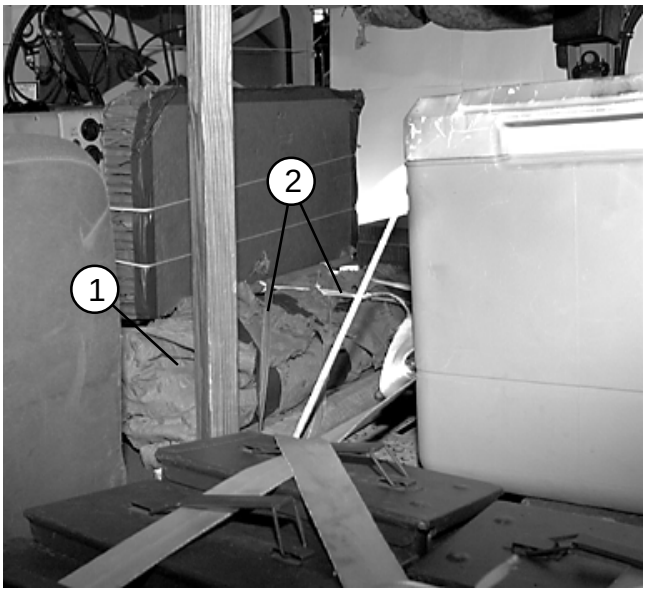

1. Remove the barrel from the 50-caliber machine gun. Wrap the barrel and the gun with cellulose wadding and tape in place.

2. Secure the machine gun and barrel to the radio mount with 1/2-inch tubular nylon webbing.

3. Place the machine gun mount in the front passenger seat with the post facing the rear on the outboard side. Pass 1/2-inch tubular nylon webbing around the top of the mount, and cross the two ends of the webbing above the post. Bring the ends of the webbing through the rings beside the seat, and tie the webbing to the box in the front.

Figure 7-8. Machine Gun and Mount Stowed and Secured

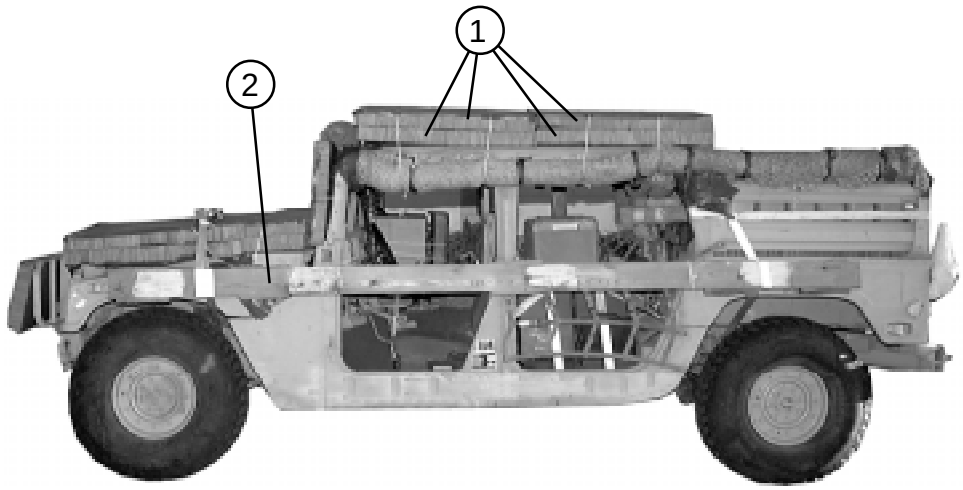

1 Cover the roof with four full sheets of honeycomb. Crush or cut the bottom layer to allow for the turret. Tape the upper layer. Secure the honeycomb to the roof with type III nylon cord.

2 Construct the body side boards and secure them to the truck as shown in FM 4-20.117/ TO 13C7-1-111, Figure 2-13.

Figure 7-9. Honeycomb Roof Cover and Body Sideboards Installed

LIFTING AND POSITIONING TRUCK AND INSTALLING OPTIONAL DRIVE-OFF AIDS

7-5. Install the optional drive-off aids on the platform as shown in Figure 2-15. Install lifting slings on the truck and position the truck on the platform as shown in Figure 2-16. Attach the drive-off aids to the wheels as shown in Figure 2-17.

LASHING TRUCK

7-6. Lash the truck to the platform with fifteen 15-foot tie-down assemblies. Install the lashings according to FM 4-20.102/TO 13C7-1-5, and as shown in Figures 7-10 and 7-11.

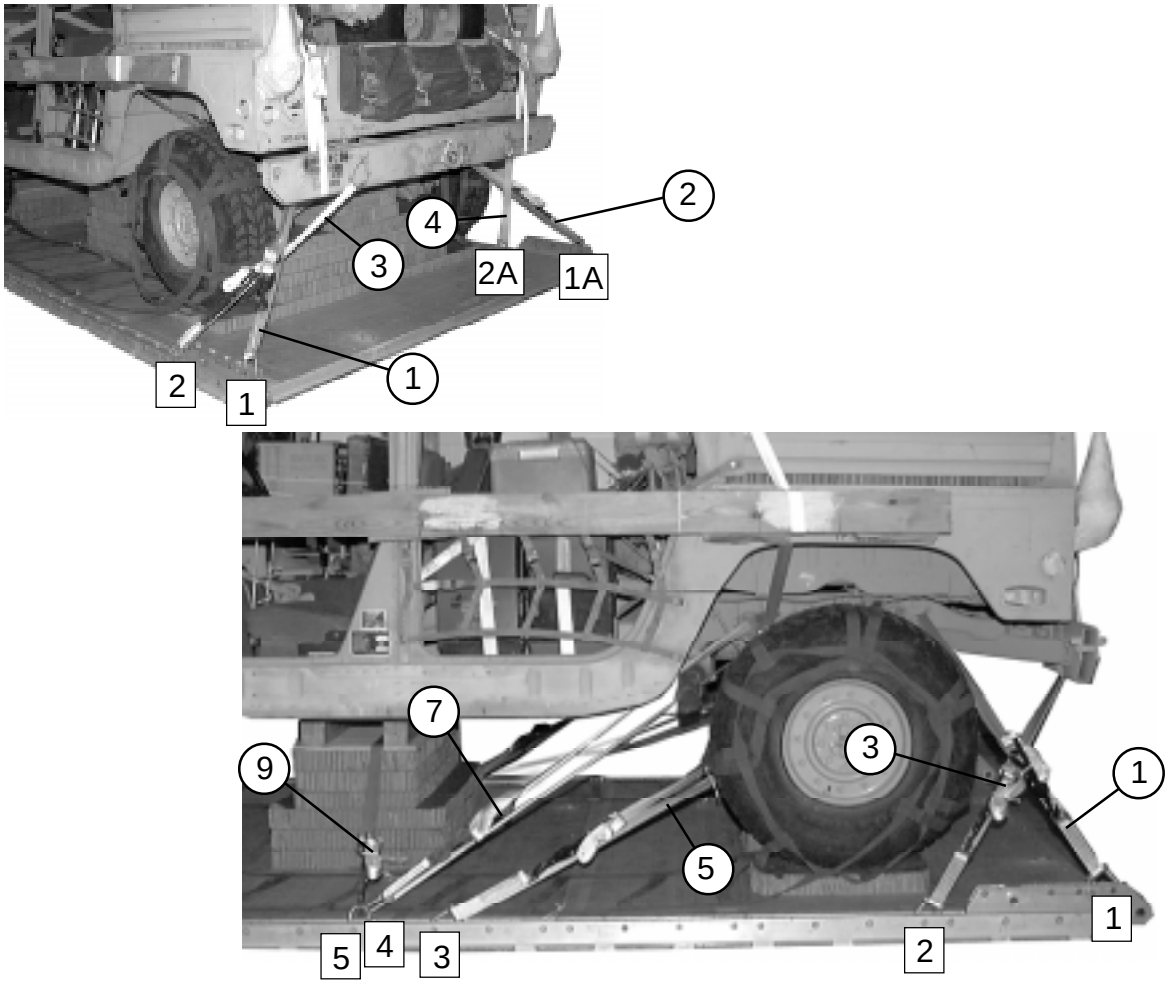

Lashing Number	Tie-down Clevis Number	Instructions
		Pass lashing:
1	1	Through tie-down bracket behind left rear coil spring.
2	1A	Through tie-down bracket behind right rear coil spring.
3	2	Through left rear lifting shackle.
4	2A	Through right rear lifting shackle.
5	3	Around left rear lower control arm.
6	3A	Around right rear lower control arm.
7	4	Through tie-down bracket in front of left rear coil spring.
8	4A	Through tie-down bracket in front of right rear coil spring.
9	5 and 5A	Pass a 15-foot lashing through clevis 5A and through its own D-ring. Pass the lashing through the hole in stack 2. Attach the lashing to clevis 5 with a load binder.

Figure 7-10. Lashings 1 Through 9 Installed

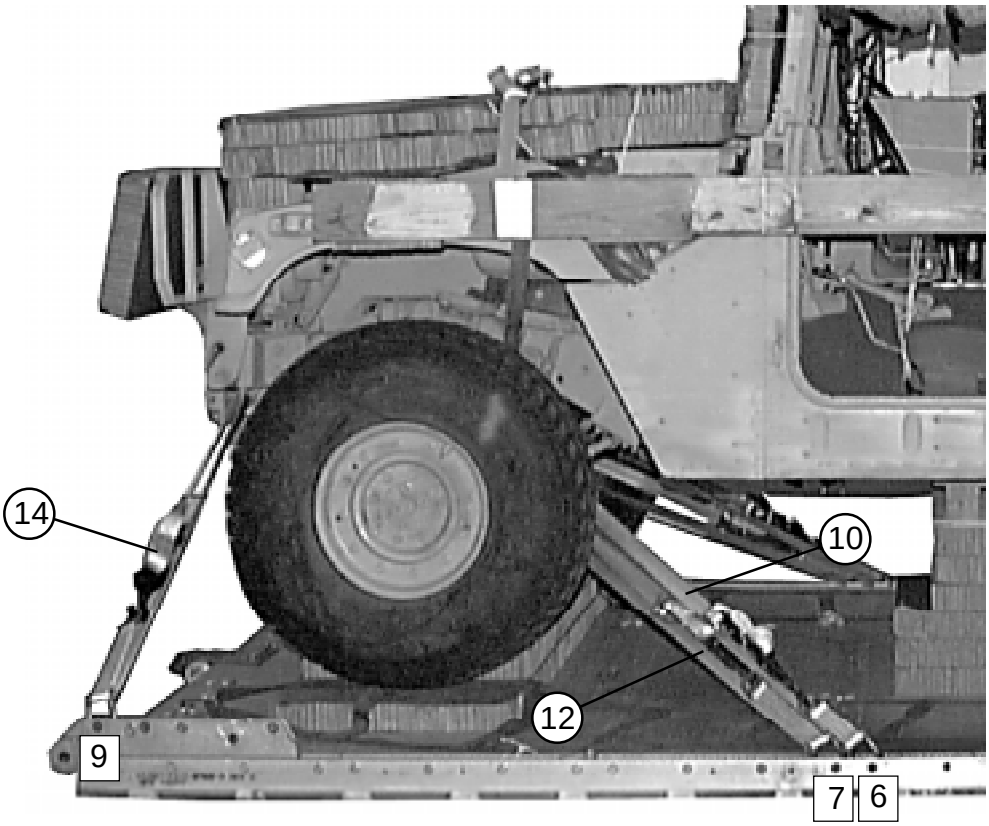

Lashing Number	**Tie-down** Clevis Number	**Instructions**
		Pass lashing:
10	6	Through tie-down bracket behind left front coil spring.
11	6A	Through tie-down bracket behind right front coil spring.
12	7	Around left lower control arm.
13	7A	Around right lower control arm.
14	9	Through tie-down bracket on end of left frame rail.
15	9A	Through tie-down bracket on end of right frame rail.

Figure 7-10. Lashing 10 Through 11 Installed

INSTALLING AND SAFETY TYING SUSPENSION SLINGS

7-7. Install and safety tie four 16-foot (2-loop), type XXVI nylon suspension slings according to FM 4-20.102/TO 13C7-1-5, and as shown in Figure 2-20.

STOWING CARGO PARACHUTES

7-8. Use three G-11 cargo parachutes on this load. Stow the cargo parachutes according to FM 4-20.102/TO 13C7-1-5, and as shown in Figure 7-12.

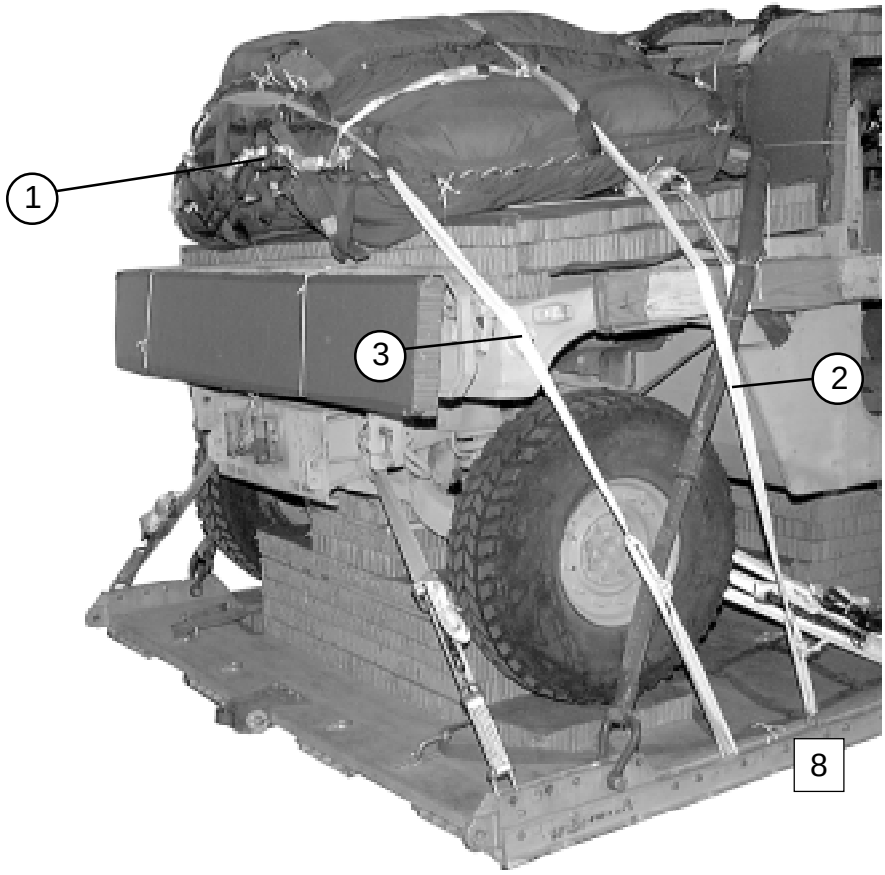

1. Place and cluster three G-11 cargo parachutes on the honeycomb over the truck hood according to FM 4-20.102/TO 13C7-1-5.
2. Tie the front restraint straps to clevises 8 and 8A.
3. Tie the rear restraint straps to the 27th bushings on each side of the platform.

Figure 7-12. Cargo Parachutes Installed

INSTALLING PARACHUTE RELEASE

7-9. Prepare and install an M-1 cargo parachute release according to FM 4-20.102/TO 13C7-1-5, and as shown in Figure 7-13.

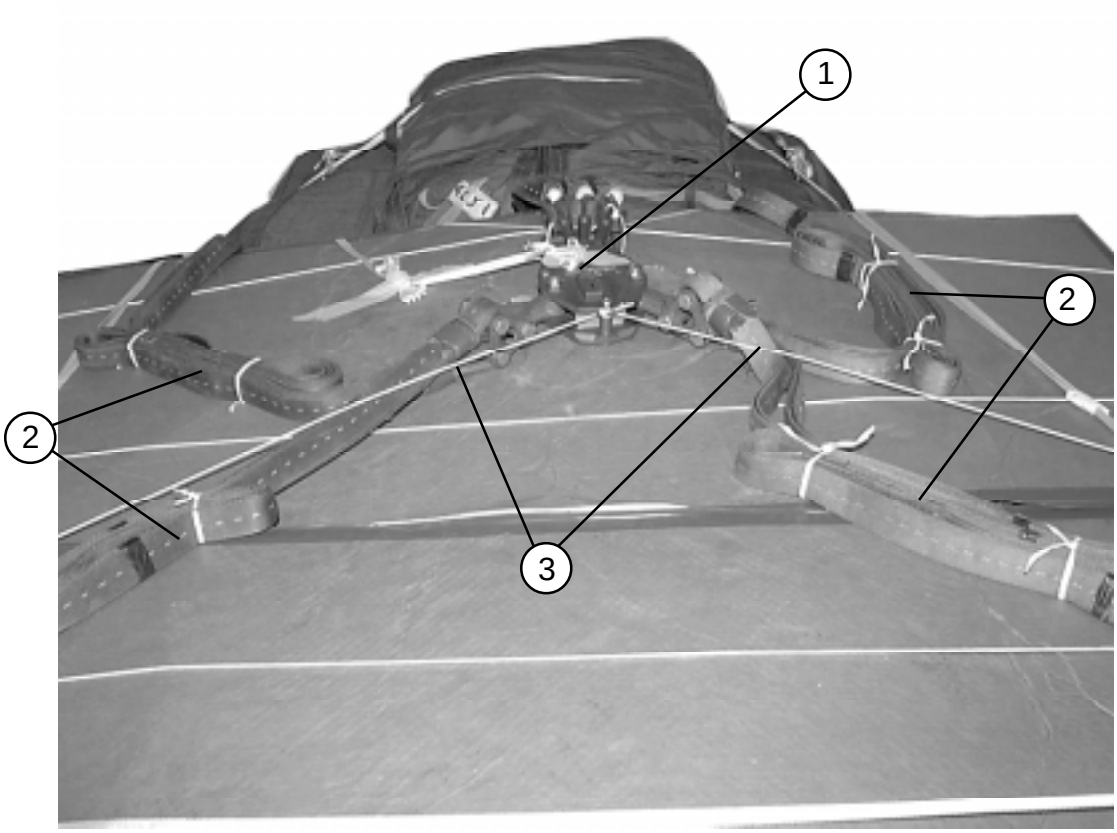

1. Place the M-1 release on the roof honeycomb in front of the parachutes.
2. S-fold the slack in the suspension slings. Tie the folds with type I, 1/4-inch cotton webbing.
3. Attach the suspension slings and the riser extensions to the release. Tie the release to convenient points on the load with type III nylon cord.

Figure 7-13. M-1 Cargo Parachute Release Installed

INSTALLING EXTRACTION SYSTEM

7-10. Install the EFTC extraction system with a 16-foot release cable according to FM 4-20.102/TO 13C7-1-5, and as shown in Figure 2-23.

INSTALLING PROVISIONS FOR EMERGENCY RESTRAINTS

7-11. Install the provisions for emergency restraints on the load according to FM 4-20.102/TO 13C7-1-5.

PLACING EXTRACTION PARACHUTE

7-12. Select the extraction parachute and extraction line needed using the extraction line requirements table in FM 4-20.102/TO 13C7-1-5. Rig the extraction line in an extraction line bag according to TM 10-1670-286-20/TO 13C5-2-41. Place the extraction parachute and extraction line on the load for installation in the aircraft.

MARKING RIGGED LOAD

7-13. Mark the rigged load according to FM 4-20.102/TO 13C7-1-5, and as shown in Figure 7-14. Complete Shipper's Declaration for Dangerous Goods according to AFJMAN 24-204/TM 38-250. If the load varies from the one shown, the weight, height, CB, and parachute requirements must be recomputed.

EQUIPMENT REQUIRED

7-14. Use the equipment listed in Table 7-1 to rig this load.

CAUTION
Make the final rigger inspection required by FM 4-20.102/TO 13C7-1-5 before the load leaves the rigging site.

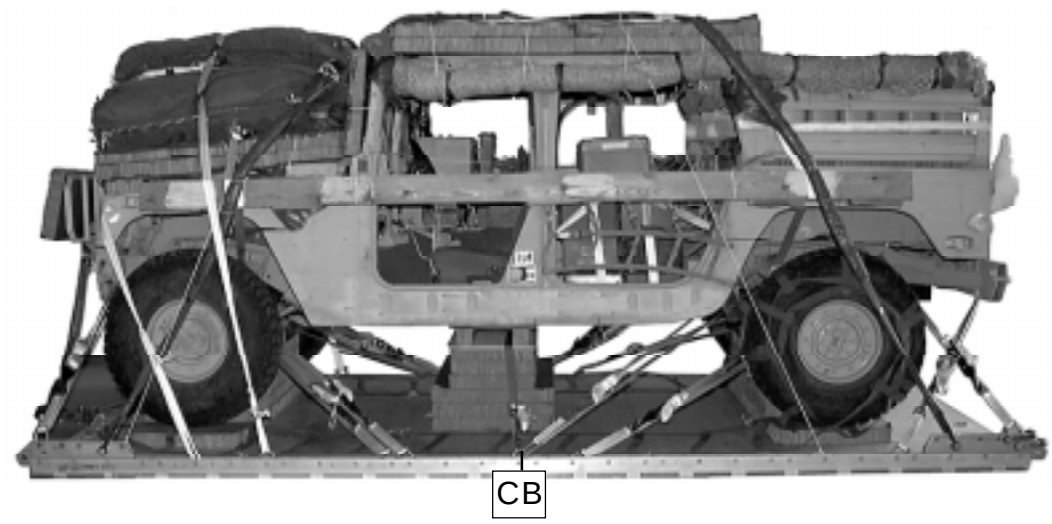

Weight: Load shown ..... 12,420 pounds
Maximum load allowed ..... 14,750 pounds
Height (with three G-11 parachutes) ..... 94 inches
Width..... ..... 108 inches
Length (overall) ..... 210 inches
Overhang: Front ..... 0 inches
Rear (EFTC).....18 inches
CB (from front edge of platform) ..... 96 inches

Figure 7-14. Ground Mobility Vehicle Rigged for Low-Velocity Airdrop

Table 7-1. Equipment Required for Rigging Ground Mobility Vehicle for Low-Velocity Airdrop

National Stock Number	Item	Quantity
8040-00-273-8713	Adhesive, paste, 1-gal	As required
4030-00-090-5354	Clevis, suspension, 1-in (large)	5
4020-00-240-2146	Cord, nylon, type III, 550-lb	As required
1670-00-434-5785	Coupling assembly, airdrop, extraction force transfer with cable, 16-ft	1
	Cover:	
1670-00-360-0328	Clevis, large	1
8135-00-664-6958	Cushioning material, packaging, cellulose wadding	As required
8305-00-958-3685	Felt, 1/2-in thick	As required
1670-01-183-2678	Leaf, extraction line (line bag)	2
	Line, drogue (for C-17)	
1670-01-064-4452	60-ft (1-loop), type XXVI	1
	Line, extraction:	
1670-01-062-6313	For C-130: 60-ft (3-loop), type XXVI	1
1670-01-107-7651	For C-141: 140-ft (3-loop), type XXVI	1
	For C-5:	
1670-01-062-6313	60-ft, (3-loop), type XXVI and	1
1670-01-107-7651	140-ft (3-loop), type XXVI	1
	For C-17:	
1670-01-107-7651	140-ft (3-loop), type XXVI	1
	Link Assembly:	4
5306-00-435-8994	Two-point:	(8)
5310-00-232-5165	Bolt, 1-in diam, 4-in long	(8)
1670-00-003-1953	Nut, 1-in, hexagonal	(8)
5365-00-007-3414	Plate, side, 3 3/4-in	(8)
	Spacer, large	
	Lumber:	
5510-00-220-6146	2- by 4-in	As required
5510-00-220-6448	2- by 6-in	As required
5510-00-220-6274	4- by 4-in	As required
5315-00-010-4659	Nail, steel wire, 8d	As required

Table 7-1. Equipment Required for Rigging Ground Mobility Vehicle for Low-Velocity Airdrop (continued)

National Stock Number	Item	Quantity
1670-00-753-3928	Pad, energy-dissipating (honeycomb) 3- by 36- by 96-in	13 sheets
	Parachute:	
	Cargo:	
1670-01-016-7841	G-11B	2
	Cargo extraction:	
1670-01-063-3716	22-ft (Add H-block for use with C-17.)	1
	Drogue (for C-17)	
1670-01-063-3715	15-ft	1
	Platform, airdrop, type V, 16-ft	
1670-01-353-8425	Bracket assembly, EFTC	(1)
1670-01-162-2372	Clevis assembly, type V	(20)
1670-01-162-2376	Bracket assembly, extraction	(1)
1670-01-162-2381	Tandem link assembly (Multipurpose link)	(4)
5530-00-128-4981	Plywood, 3/4-in	3 sheets
1670-01-097-8816	Release, cargo parachute, M-1	1
	Sling, cargo, airdrop	
	For suspension:	
1670-01-063-7761	16-ft (2-loop), type XXVI nylon webbing	4
	For lifting:	
1670-01-062-6304	9-ft (2-loop), type XXVI nylon webbing	2
1670-01-062-6303	12-ft (2-loop), type XXVI nylon webbing	2
	For deployment:	
1670-01-062-6304	9-ft (2-loop), type XXVI nylon webbing	1
	For riser extension:	
1670-01-062-6302	20-ft (2-loop), type XXVI nylon webbing	6
5340-00-040-8219	Strap, parachute release, multi-cut, comes w/ 3 knives	2
7510-00-266-5016	Tape, adhesive, 2-in	As required
1670-00-937-0271	Tie-down assembly, 15-foot	28
1670-01-344-0825	Vehicle drive-off aid	1
	Webbing:	
8305-00-268-2411	Cotton, 1/4-in, type I	As required
8305-00-082-5752	Nylon, tubular, 1/2-in	As required
8305-00-263-3591	Type VIII	As required

GLOSSARY

ACB	attitude control bar
AD	airdrop
AFB	Air Force base
AFJMAN	Air Force Joint Manual
AFR	Air Force regulation
AFTO	Air Force technical order
ALC	Airlift Logistics Center
attn	attention
BCS	battery computer system
C	change
cap	capacity
CB	center of balance
CDU	computer display unit
chap	chapter
d	penny
DA	Department of the Army
DC	District of Columbia
DD	Department of Defense
diam	diameter
DSVT	digital subscriber voice terminal
DVE	driver vision enhancer
EFTC	extraction force transfer coupling
EPW	enemy prisoner-of-war
fig	figure
FM	field manual
ft	foot/feet
gal	gallon
GLPS	gun laying positioning system
GPS	global positioning system
G/VLLD	ground/vehicle laser locator designator
HQ	headquarters
HMMWV	high-mobility, multipurpose, wheeled vehicle
IFSAS	initial fire support automated system
in	inch
JAI	joint airdrop inspector
LAW	light anti-tank weapon
lb	pound
LSS	light-scattering screen
LD/R	laser designator/rangefiner
LTACFIRE	lightweight tactical fire direction system

LV	low-velocity
LVOSS	light vehicle obscuration smoke system
MCRP	Marine Corps Reference Publication
mm	millimeter
MOPP	mission oriented protective posture
MRE	meal, ready-to-eat
NSN	national stock number
PADS	position and azimuth determining system
PDB	power distribution box
PLU	program load unit
OVE	on-vehicular equipment
SMS	semi-automatic meteorological sensor
STIK	soft-top installation kit
TACCS	tactical army combat service support computer system
TM	technical manual
TO	technical order
TRADOC	US Army Training and Doctrine Command
US	United States
w	with
yd	yard

REFERENCES

AFR 55-40/AR 59-4. Joint Airdrop Inspection Records, Malfunction Investigations and Activity Reporting. 27 November 1984.

AFJMAN 24-204/TM 38-250. Preparing Hazardous Materials for Military Air Shipments. 25 November 1994.

*FM 4-20.102/NAVSEA SS400-AB-MMO-010/TO 13C7-1-5. Airdrop of Supplies and Equipment: Rigging Airdrop Platforms. June 2001.

FM 10-500-53/MCRP 4-3.81/TO 13C7-18-41. Airdrop of Supplies and Equipment: Rigging Ammunition. 1 March 1996.

TM 9-2320-280-10/TO 36A-12-1A-2091-1/TM 2320-10/6. Operator's Manual for Truck, 1 1/4-ton. April 1985

TM 10-1670-268-20&P/TO 13C7-52-22. Organizational Maintenance Manual With Repair Parts and Special Tools List: Type V Airdrop Platform. 1 June 1986.

TM 10-1670-277-23&P/TO 13C5-28-2/NAVAIR 13-1-30/. Unit and Direct Support (DS) Maintenance Manual Including Repair Parts and Special Tools List for Parachute, Cargo Type, 28-ft Diam, Cargo Extraction. 9 October 1990.

TM 10-1670-278-23&P/TO 13C5-26-2/NAVAIR 13-1-27/TM 01109C-23&P/1. Unit and Intermediate DS Maintenance Manual Including Repair Parts and Special Tools List for Parachute, Cargo Type, 15-ft Diam, Cargo Extraction. 6 November 1989.

TM 10-1670-279-23&P/TO 13C5-27-2/NAVAIR 13-1-28. Unit and Intermediate DS Maintenance Manual Including Repair Parts and Special Tools List for Parachute, Cargo Type, 22-ft Diam, Cargo Extraction. 30 August 1989.

TM 10-1670-280-23&P/TO 13C5-31-2/NAVAIR 13-1-31. Unit and Intermediate DS Maintenance Manual Including Repair Parts and Special Tools List for Parachute, Cargo Type, G-11A, G-11B, and G-11C. 5 August 1991.

TM 10-1670-286-20/TO 13C5-2-41. Unit Maintenance Manual for Sling/Extraction Line Panel (Including Stowing Procedures). 1 April 1986.

AFTO Form 22. Technical Order Publication Improvement Report

DA Form 2028. Recommended Changes to Publication and Blank Forms. February 1974.

Shipper's Declaration for Dangerous Goods. Locally procured form

*FM 4-20.102/NAVSEA SS400-AB-MMO-010/TO 13C7-1-5 (formerly FM 10-500/TO 13C7-1-5) reflects the new Army numbering system.

FM 4-20.117 (FM 10-517)
TO 13C7-1-111
1 OCTOBER 2001

By Order of the Secretary of the Army and the Air Force:

ERIC K. SHINSEKI
General, United States Army
Chief of Staff

Official:

JOEL B. HUDSON
Administrative Assistant to the
Secretary of the Army
0127102

GEORGE T. BABBITT
General, USAF
Commander, AFMC

MICHAEL E. RYAN
General. USAF
Chief of Staff

DISTRIBUTION:

Active Army, Army National Guard, and U.S. Army Reserve: To be distributed in accordance with the initial distribution number 113833, requirements for FM 4-20.117.